800 Model

Energy-saving, Highly efficient

Owner's Manual

High-performance Flux/Current Vector Control AC Drive

Version No. 2.31
No. 2.32

200V Series 0.4KW～110KW (0.5HP～150HP)
400V Series 0.75KW～450KW (1HP～600HP)

Summary of relevant differences LS800 No. 2.31 and No. 2.32

The LS800 inverter has been installed the software No. 2.31 or No. 2.32 version per customer's demand at ex-factory. Please refer to the following summary list for the relevant differences between these two versions:

LS800 NO.2.31 Version

※ FM AO: Analog Output

(0) PWM(Pulse Width Modulation) output－ To output DC voltage to (FM1 or FM2) terminal through PWM at a maximum range: DCV 0V～10V/1mA.

(1) Pulse frequency output－To output the pulse frequency in a multiple ratio (F132 or F137) to (FM1 or FM2) terminal.

※ Please refer to P5-34~P5-35 for the description of parametric functions in details.

R	Parameters	Descriptions	Range	Unit	Ex-factory value
×	F131	FM1 Analog output mode	0～1		0
○	F132	Multiple ratio of pulse frequency 1	1～36		1
○	F133	FM1 Multifunctional output setup	0～21		1
○	F134	FM1 Analog output gain/10V	0.50～8.00	Pu	1.00
×	F135	FM1 Analog polarity setup	0～1		0
×	F136	FFM2 Analog output mode	0～1		0
○	F137	Multiple ratio of pulse frequency 2	1～36		1
○	F138	FM2 Multifunctional output setup	0～21		10
○	F139	FM2 Analog output gain/10V	0.50～8.00	Pu	1.00
×	F140	FM2 Analog polarity setup	0～1		0
×	F202	Longest outage duration allowable	0～5000	ms	0

LS800 NO.2.32 Version

※ FM AO : Analog Output－(FM1or FM2) Output mode

(0) 0～10V output－ Corresponding value of (FM1 or FM2) output:0～10V.

(1) ±10V output－ Corresponding value of (FM1or FM2) output: ±10V.

(2) 4～20mA output－ Corresponding value of (FM1or FM2) output:4～20mA.

※ Please refer to P5-36 ~ P5-37 for the description of parametric function in details.

R	Parameters	Descriptions	Range	Unit	Ex-factory value
×	F131	Longest outage duration allowable	0～5000	ms	20
○	F132	Terminal-actuating setup for failure reset and after power restoration	0～1		0
○	F133	FM1 Output mode	0～2		0
○	F134	FM1 Multifunctional output setup	0～21		1
×	F135	0V/4mA Bias gain	0.0～700.0	%	0.0
×	F136	10V/20mA Gain	0.0～700.0	%	100
○	F137	FM2 Output mode	0～2		0
○	F138	FM2 Multifunctional output setup	0～21		10
○	F139	0V/4mA Bias gain	0.0～700.0	%	0.0
×	F140	10V/20mA Gain	0.0～700.0	%	100.0
×	F202	Reserved			

Appended please find the introduction of difference relevant to the parameter settings between LS800 Series No.2.31 and LS800 Series No.2.32. When mentioned 800 Series or LS800 Series in this manual, it refers that applies to LS800 Series No.2.31 and LS800 Series No.2.32; a separate introduction will be prepared for their inconsistent contents, if any.

PREFACE

More and more applications of ac drive are commercially used today as automated process operation becomes popular. Based on our professional commitments by focusing on modern technologies and pushing for the latest industry standards, we attach this manual of our high performance ac drive. This manual contains detailed instructions on installation (including operation, maintenance, inspection, and repair), peripheral wiring, specifications, and parameter setup process, and gives you complete description of types and technical operation of the product.,(diagnosis and troubleshooting of abnormalities, and cautions relevant to the routine maintenance of ac drive. In order to ensure a correct installation and operation of ac drive, please peruse this product instruction and appropriately keep the operation manual.)

To help you complete the installation setup in a systematic and efficient way, a summary process flow chart is given in the title "Commissioning" for you to skip over otherwise complicated setup procedures while saving your time in
working out the proper installation.

Thank you for having our LS800 Series (NO.2.31 and NO.2.32) Flux Current Vector Control AC Drive (Sensorless & Close Loop),one that has incorporated the advanced IGBT Module mute design and decades of our expertise to yield the optimal economic benefits for your from your production facilities.

※ All the products are constantly modified thereof specifications to improve the perfection; for downloading the latest version of specifications, please visit Long Shenq website http：//www.acinverter.com.tw

The company reserves the right to modify the models and specifications without notice. Copyright and all rights are reserved. No part of this publication may be reproduced in any form.

STATEMENT OF SAFETY

◈ Read this manual before installation, wiring, operation, maintenance, inspection, and repair, and follow the appropriate instructions. For any doubt, consult with us, or local dealer.

◈ To prevent any personal injury or property loss due to accident, strictly comply with warning, notice, and danger marks and prompts following those marks.

◈ Place this manual in locations where permits easy access is allowed for the operators to refer to.

DESCRIPTION OF MARKS

CAUTION

CAUTION To warn that any act of omission to the instructions following this mark may cause personal injury.

WARNING

WARNING To warn that any act of omission to the instructions following this mark may cause personal injury and property loss.

INHIBIT

RESTRICTED To warn that any act of omission or violation against the instructions following this mark may cause personal injury and property loss.

◈ This product has survived strict QC, and provided with reinforced packing materials before leaving our factory to ensure free of any unexpected impact or damage during the shipment.

◈ Operators referred in this manual include qualified technicians of service and installation, those who are familiar with technologies involved, and operating employees.

CAUTIONS

◈ Each unit of ac drive has been ex-factory set, never modify the setup of internal parameters at own discretion unless absolutely necessary. Please confirm first the safety allowance to the motor or the mechanical system before operation or in case that the output frequency must be set at 60 Hz or higher.

◈ Only qualified technician is allowed to operate this ac drive. The qualified technician to this purpose is referred to one who is familiar with the internal construction, installation procedure, operating method, and service steps of the ac drive; and who also knows how to practise safety measures to prevent any hazard and/or accident.

◈ Before installing the ac drive, check the environment of the installation site to see if it is proper for the installation. If yes, firmly secure the ac drive to a flat and smooth cement or metal plate wall, properly guarded from impact by foreign object that may damage the ac drive.

◈ Addition of blowing fans is a must to ensure that the temperature of the incoming air will not rise to such an extent that may affect the operation of multiple ac drives installed in the same control panel.

◈

Check all the wires connected to each terminal block are firmly secured, and all grounding terminals on ac drive and on motor are properly earthed.

◈ Before operating, always confirm if the voltage from the power source complies with the rated voltage of the ac drive; and check for correct wiring to any brake controller or brake resistance, if provided.

◈ Whereas, VDC of the primary loop in the ac drive is as high as 650 VDC (400V Class)/325 VDC (200V Class), never use your hand to direct touch any loop in the ac drive to avoid electric shock. Do not remove the protection lid when the loop is conducted. Make sure to kill the source, wait for the CHARGE indicator to go off, and verify using a multi-meter the absence of VDC between ○+P、○-N terminals before performing any service or inspection job.

◈ Terminals inside the ac drive when not in operating status may carry dangerous voltage. Never touch the terminal block of the ac drive with bare hands. To perform any wiring inspection and service routines, always wait for five minutes or longer after the power source is turned off and after the CHARGE indicator goes off.

◈ If the ac drive is expected not to use for a longer period, make sure that the power supply to the ac drive is cut off, and measures offending off dust and humidity are in place to avoid unnecessary replacement of parts in future use.

◈ When the ac drive is going to shut down for an extended period of time, please perform the charging/discharging work for the capacitor once every two months; that is, turn on the power supply for one minute, and then turn off the power supply and wait for the "CHARGE" indicating lamp to go out, re-turn on the power supply, repeatedly perform this cyclic action for more than 10 times in order to prolong the life of ac drive.

TABLE OF CONTENTS

Summary Differences Between LS800 V.2.31 and LS800 V.2.32
Preface 1
Description of Safety & Symbols & Warnings 2
I. Installation
- **Installation 1-1**
- **Installation Site Setup & Control 1-2**
- **Description of Nameplate.....1-3**
- **Designations of Part.....1-4**
- **High Horsepower Control Box Layout.....1-4**
- **Removing the AC Drive Lid.....1-5**
- **Installation Direction & Space.....1-7**
- **Functions and Maintenance of Cooling Fan.....1-8**

II. Wiring
- **Schematic View of Peripheral Configuration.....2-1**
- **Mounting the Brake Control Circuits.....2-3**
- **Primary Loop Terminal Block.....2-4**
- **Wiring Methodology.....2-5**
  - ⊙ 3-Phase Primary Loop Wiring Diagram-1(200~240V).....2-5
  - ⊙ 3-Phase Primary Loop Wiring Diagram-2(380~480V).....2-6
- **Notices to Wiring.....2-7**
- **Primary Loop & Control Loop Routings Comparison Chart.....2-8**
- **Control Terminal Block Location Reference Chart 2-9**
- **Wiring connection of control circuit terminals.....2-11**
  - ⊙ Notices to Control Circuit Wiring.....2-11
  - ⊙ Analog input Terminals (AV1,AV2,AI,AVG).....2-12
  - ⊙ Digital input Terminals (Di1～Di8,COM) 2-12
  - ⊙ Do Output(Do1,Do2,Do3,DCM) 2-12
- **Function description of cointrol circuit terminals(No.2.31).....2-13**
- **Wiring diagram of control circuit terminal (NO.2.31).....2-14**
- **Function description of cointrol circuit terminals (No.2.32).....2-15**
- **Wiring diagram of control circuit terminal (NO.2.32).....2-16**
  - ⊙ Coping with Sink Mode / Source Mode(No.2.31).....2-17
  - ⊙ Internal / external wire for input mode power supply coping with Sink / Source mode (No.2.32).....2-18
- **PG-AB2 Installing.....2-19**

⊙ PG Speed Control Card (Option Card).....2-20
⊙ PG-AB2 Wiring Diagram.....2-22
⊙ PG-AB2 I/O Circuits Construction Chart.....2-23
⊙ Main power source circuit diagram.....2-25

III. Digital Operator Panel

◆ **Location&Designation of Digital Operator.....3-1**
◆ **Function Description of Keys.....3-2**
◆ **Parameter Setup Mode.....3-3**
◆ **Operator Control Mode.....3-4**
◆ **Multi-function Digital I/O Terminals Status Display Inspection.....3-5**

IV. Test Run

◆ **Commissioning Operation.....4-1**
⊙ Inspection before Operation.....4-1
⊙ Commissioning.....4-1
⊙ Operation Checklist.....4-1
◆ **Auto-tuning Function.....4-2**
⊙ Prerequisites for Auto-tuning.....4-2
⊙ Parameter Auto-tune.....4-2
◆ **Auto-tuning Funing Process Flow Chart.....4-4**
◆ **Basic Parameter Setup.....4-5**
◆ **Quick Operation Parameter Setup Block Diagram.....4-6**
⊙ Fast Operation Control Mode.....4-6
⊙ Five control modes for selection.....4-7
⊙ Torque Current Limit, Torque Current Comm.....4-9
⊙ Position tracking of pulse-wave command.....4-9

V. Description of Parameter Function

◆ **Operator Display Setting.....5-1**
◆ **Operation Control Parameters.....5-3**
◆ **Speed Limit.....5-7**
◆ **Multi-stage Speed command setup.....5-9**
◆ **Acceleration/Deceleration Time.....5-10**
◆ **Analog input 5-12**
◆ **Digital (Di) input.....5-18**
◆ **Digital (Do) outpu.....5-22**

目 錄

◆ Jumping Frequency.....5-25
◆ Motor protection setup.....5-25
◆ Automatic Operation Function.....5-29
◆ Magnetic Flux Setup.....5-31
◆ FM 1 AO Waveform Output(No.2.31 Special-Purpose) 5-34
◆ FM 2 AO Waveform Output(No.2.31 Special-Purpose).....5-34
◆ AC Drive Parameters(No.2.32 Special-Purpose).....5-36
◆ FM1 AO analogy output (No.2.32 Special-Purpose).....5-36
◆ FM 2 AO analogy output (No.2.32 Special-Purpose).....5-37
◆ Motor Nameplate.....5-37
◆ Control Mode.....5-38
◆ Encoder Setup.....5-40
◆ Motor Electric Parameters.....5-43
◆ Flux Estimation Tester.....5-44
◆ Speed PI Controller.....5-45
◆ Zero-Speed positioning.....5-48
◆ Abnormality Record.....5-49
◆ External PID.....5-51
◆ Special parameter settings.....5-55
◆ Communication setup.....5-56
◆ MODBUS Communication.....5-58
◆ Recalling Parameters.....5-65

VI. Protection & Troubleshooting
◆ Abnormality Diagnosis.....6-1
◆ Most Frequently Used Troubleshooting.....6-5

VII. Test, Inspection, & Maintenance.....7-1

VIII. Selection of brake resistance and brake unit
◆ Selecting Brake Unit.....8-1
◆ Selecting Brake Resistance.....8-3
◆ Braking resistor-watt and resistance values of the calculation.....8-5

IX. Appendix
◆ A Standard specifications.....9-1
◆ B Ex-factory set values.....10-1
◆ C Parameter Setup Schedule.....11-1
◆ D Err Display 12-1
◆ E Dimensional Drawings of Mechanism.....13-1

I Installation

- Installation.....1-1
- Installation Site Setup & Control.....1-2
- Description of Nameplate.....1-3
- Designations of Part.....1-4
- High Horsepower Control Box Layout.....1-4
- Removing the AC Drive Lid.....1-5
- Installation Direction & Space.....1-7
- Functions and Maintenance of Cooling Fan.....1-8

Installation

First-time Use

Thank you for purchasing our 800 model AC Drive. To protect your right and interests, please confirm the following receiving inspection prior to the installation and use of AC Drive.

If description and specification of the Product received are the same as that you have ordered ?

Check upon the nameplate found on the side of the product if the specification complies with that you have ordered.

Any damage ?

Check the appearance for any damage to the product, such as ingression of water, damaged package or dents on the machine during transportation.

Is there any loosening lid/screw ?

Confirm the torque using a screw driver if required

WARNING

Upon receiving Series 800 AC Drive, check for correct voltage, specification, and capacity. Any mistake in the voltage class may lead to burnt-out of the drive, and personal injury or fire hazard in serious case.

Installation Site Setup & Control

Installation Site

INHIBIT

The installation site shall be far away from the following location：

- Inflammable materials, e.g., wood.
- Dust, metal powder, and oil stain.
- Radioactive substance, and EMI.
- Corrosive gases, liquids, and are prone to water leakage, and high humidity.
- Vibration, such as having the ac drive installed at where attached to any machine vulnerable to vibration.
- Where exposed to direct sunshine, or at an ambient temperature lower than -10°C or higher than 45°C; and
- Any location at a sea level of 1000m or higher.

WARNING

Avoid installation or placement of the ac drive in any of those locations described above since severe environment will subject the ac drive to failure, damage, deterioration, or even fire hazard.

Temperature & Humidity

Type of Installation	Ambient	Ambient Humidity
Closed Wall Mounting	-10 ~ +45°C	Below 95%RH (non-condensation)
In Panel Mounting	-10 ~ +50°C	Below 95%RH (non-condensation)
Storage Temperate	-20 ~ +60°C	Below 95%RH (non-condensation)

※ **For reference only in environment impact assessment of the installation!**

Description of Nameplate

Found on one side of the ac drive, the nameplate bears model, specification, protection class and other information as described below.

Model No. →	MODEL	: LS800-24K0-XXX(VER 2.31)
Input Spec. →	INPUT	: AC 3PH 200~240V 50/60Hz
Output Spec. →	OUTPUT	: AC 3PH 0 ~240V 4.2KVA 16.0A cont 24.0A int 4.0KW 5HP
Output frequency →	Freq.Range	: 0.0~400.0 Hz
Protection Class →	PANEL.	: IP20 NEMA 1
Manufacturing Series No. →	S/NO	:

Description of Model on the Nameplate of the Drive : (MODEL)

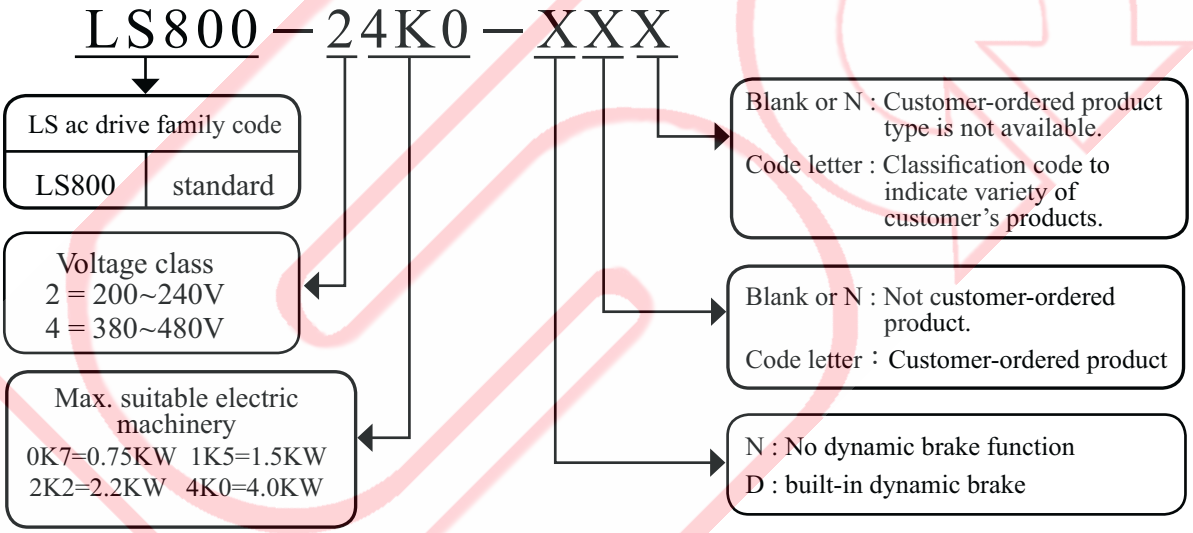

◆ Model No. and power of ac drive

Model No.	Power	Model No.	Power	Model No.	Power
0K4	0.4KW	018	18.5KW	132	132KW
0K7	0.75KW	022	22KW	160	160KW
1K5	1.5KW	030	30KW	185	185KW
2K2	2.2KW	037	37KW	220	220KW
4K0	4.0KW	045	45KW	300	300KW
5K5	5.5KW	055	55KW	375	375KW
7K5	7.5KW	075	75KW	450	450KW
011	11KW	090	90KW		
015	15KW	110	110KW		

Designations of Parts

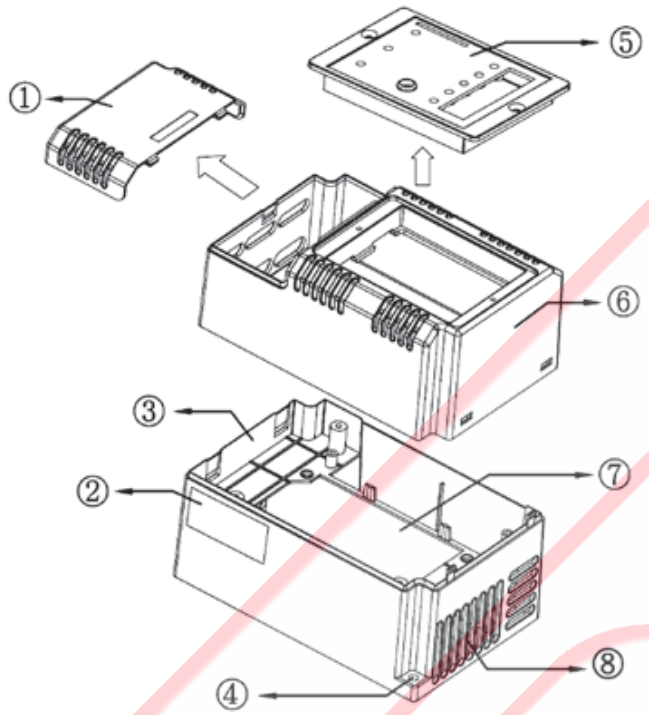

① Terminal Block Lid
② Specification Nameplate
③ AC Drive Base
④ Setscrew Hole
⑤ Keyboard Panel
⑥ AC Drive Lid
⑦ Heat Sink Location
⑧ Heat Sink Vent

High Horsepower Control Box Layout

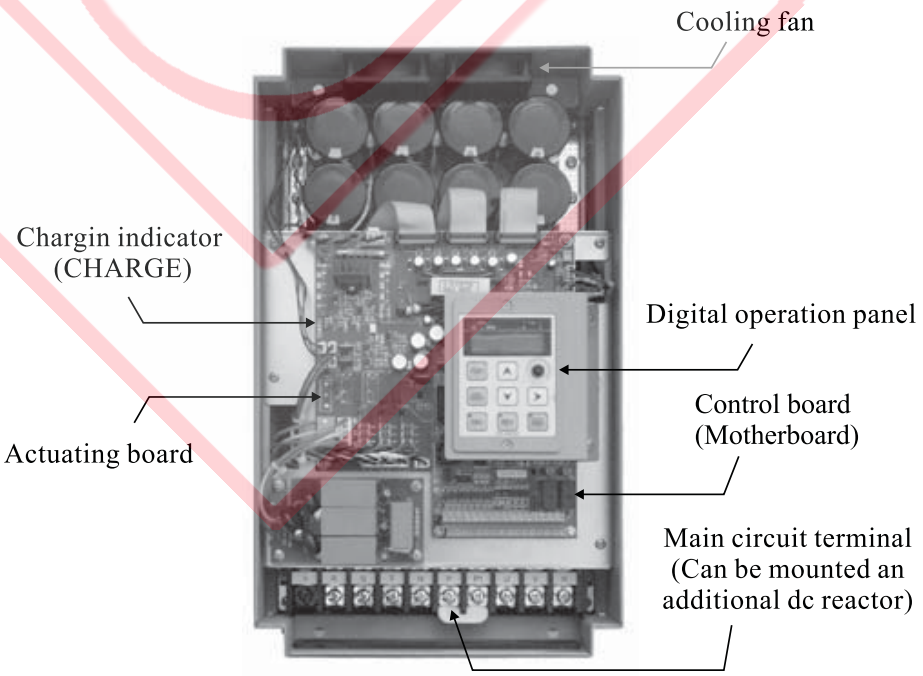

Removing the AC Drive Lid

0.5HP～5.0HP

Step 1: Have one thumb to slightly push in the locking buckle

Step 2: Push to lift the lid and remove the terminal lid

Step 3: To remove the lid for service, have both thumbs press LH & RH locking buckles to unbuckle the lid.

step 4: Hold and pull upward to remove the entire lid

7.5HP～30HP

Step 1 : Take and hold the PULL UP and push the panel up

Step 2 : Remove the panel

40HP～300HP

Step 1 : Unscrew to remove four screws first

Step 2 : Carefully remove the panel

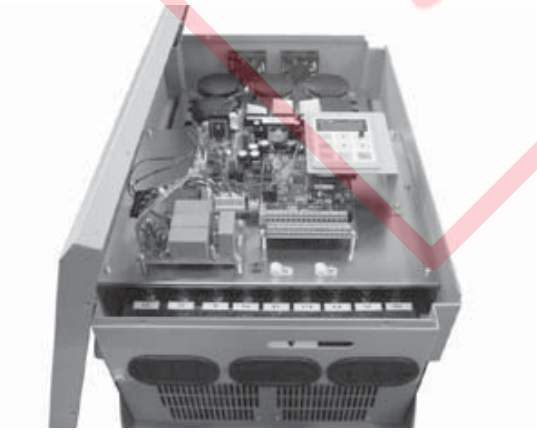

Step 3 : Finish the removal of panel

Installation Direction & Space

To maintain good cooling air circulation, the ac drive must be secured in vertical position with sufficient clearance left to its surroundings, abutted components and baffles. Whereas cooling fans are mounted at the base of the ac drive, sufficient space shall be maintained to facilitate the air ventilation.

Cautionary points for installations:

（1）For application at an ambient temperature of 40 or higher, install the ac drive at a well ventilated place or enhance the cooling device for external environment.

（2）Instant generation of high temperature may take place if an additional brake resistor is equipped to the ac drive; please select carefully the installation site for the brake resistor, or mount additional fans to help heat dissipation.

（3）Installation site should be well ventilated and kept far away from inflammables.

（4）Determine the minimum clearance between the body of the ac drive and the wall according to the model of the ac drive and the number of horsepower.

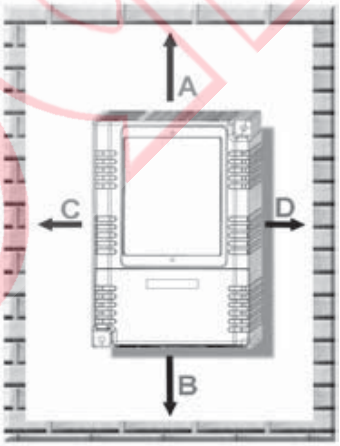

CAUTION

After removing the power source, wait for five minutes or longer to allow the internal capacitor to complete discharging before opening up the lid.

Minimum In-panel Installation Clearance (Refer to Chart and Table)

Direction &Safe distance / LS800 Capacity	A	B	C	D
≤ 2.2kw	≥ 100 mm	≥ 100 mm	≥ 50 mm	≥ 50 mm
4.0kw ~ 11kw	≥ 120 mm	≥ 120 mm	≥ 50 mm	≥ 50 mm
15kw ~ 22kw	≥ 150 mm	≥ 150 mm	≥ 100 mm	≥ 100 mm
30kw ~ 37kw	≥ 200 mm	≥ 200 mm	≥ 150 mm	≥ 150 mm
45kw ~ 75kw	≥ 300 mm	≥ 300 mm	≥ 200 mm	≥ 200 mm
90kw ~ 220kw	≥ 400 mm	≥ 400 mm	≥ 250 mm	≥ 250 mm
300kw ~ 375kw	≥ 500 mm	≥ 500 mm	≥ 300 mm	≥ 300 mm

Functions and maintenance of cooling fan

◆ There is cooling fan mounted inside the ac drive and will be triggered its running when temperature of ac drive reaches up to 40°C after operation. Temperature rise to reach 85°C (±5°C) due to a heavy & full load or a too-high environment temperature will trip an over temperature protection (Err5).

◆ Regular cleaning and maintenance is necessary to ensure the heat sink function of cooling fan when mounted at a place with worse environmental conditions, such as power, dust, oil sludge and cotton fibers etc .

II Wiring

- Schematic View of Peripheral Configuration.....2-1
- Mounting the brake control circuit.....2-3
- Primary Loop Terminal Block.....2-4
- Wiring Methodolog.....2-5
- Notices to Wiring.....2-7
- Primary Loop & Control Loop Routings Comparison Chart.....2-8
- Control Terminal Block Location Reference Chart.....2-9
- Wiring connection of control circuit terminals.2-11
- Schedule of Control Terminal Function (NO.2.31).....2-13
- Control Circuit Terminal Block Wiring Diagram(NO.2.31).....2-14
- Schedule of Control Terminal Function (NO.2.32).....2-15
- Control Circuit Terminal Block Wiring Diagram (NO.2.32).....2-15
- PG-AB2 Installing and Wiring.....2-18

Schematic View of Peripheral Configuration

3 Phase 200V/400V Series

System wiring diagram for model below 15HP(including) (For peripheral machines, please select them according to the need)

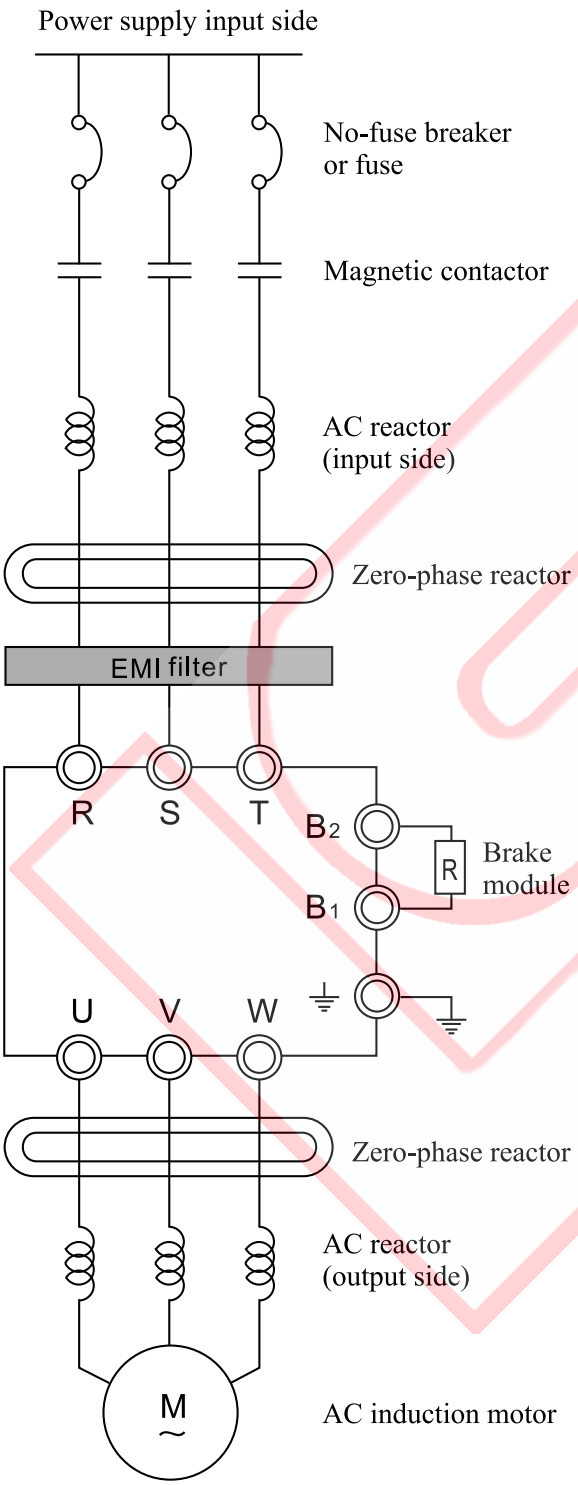

Power supply input side	Please follow the rated power supply specifications from the operation instruction manual to install the power supply (Please see Appendix A P9-1).
No-fuse breaker or fuse	There may be a higher input current when turning on the power supply. Please select an appropriate No-Fuse Breaker or Fuse.
Magnetic contactor	When mounted a magnetic contactor (MC) at the power supply side, please do not use this MC to make a frequent ON and OFF operations to avoid failing the ac drive. The number of time to switch ON/OFF MC shall be one time in 30 minutes the utmost.
AC reactor (input side)	When connected to a power supply transformer with a higher capacity (above 600KVA) or switching over to phase capacitance may be desired, a current higher than the peak value will inrush into the input power supply circuit and damage the AC drive; therefore, additional mounting of AC reactor is recommended to improve the power while the wiring distance shall be within 10m.
Zero-phase reactor	Fitted to attenuate the low-frequency interference; especially for the locale with audio frequency device together with interference from the input & output sides reduced as well. The effective range is AM frequency channel 10MHz.
EMI filter	Can be applied to weaken the interference from electromagnetic waves.
Brake module	Mounted to shorten the deceleration time for motor. Please see the details in Chapter 8.(Optional)
AC reactor (output side)	When wired from the output side to motor, the wiring length of motor will affect the magnitude of voltage back wave. An additional mounting of AC reactor is recommended when the wiring length of motor is longer than 20 meters (the closer the wiring length to the AC drive side, the better the effect will be).

3 Phase 200V/400V Series

System wiring diagram for model above 20HP(including) (For peripheral machines, please select them according to the need)

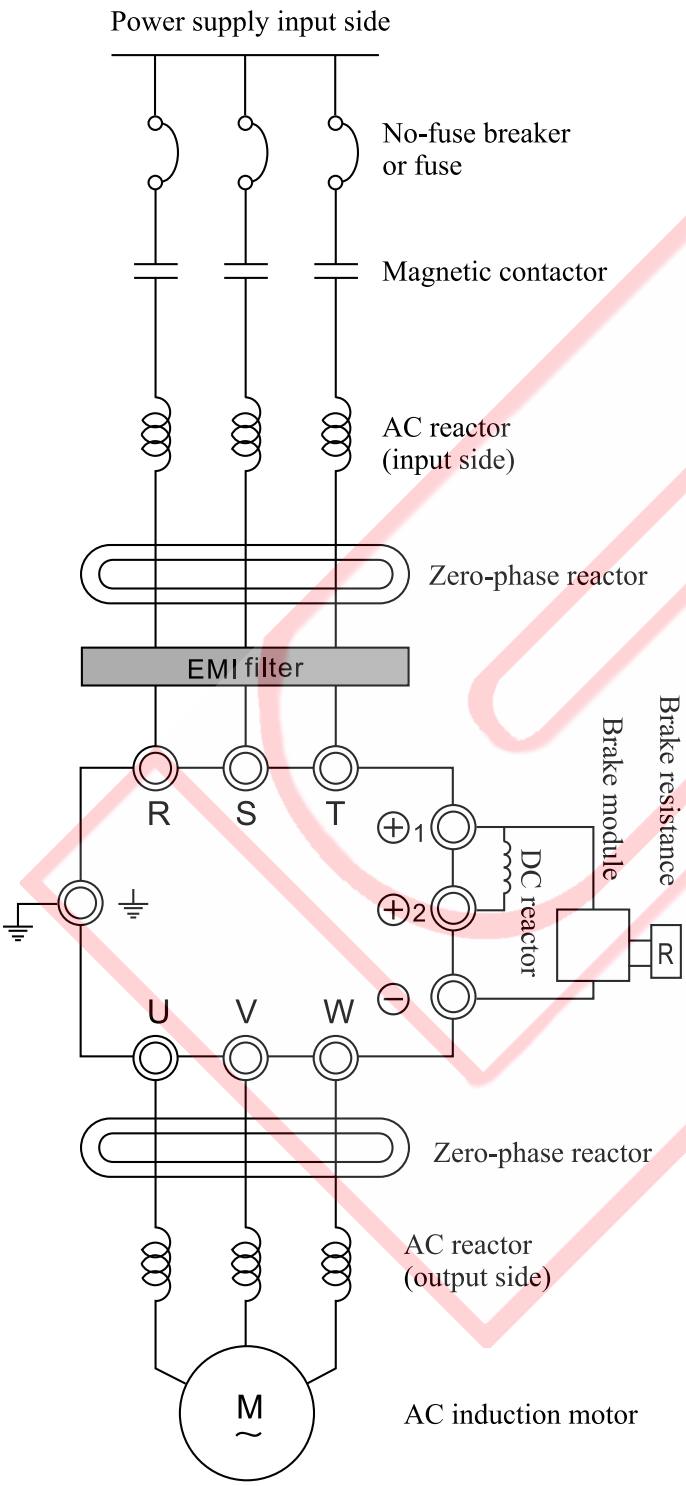

Power supply input side	Please follow the rated power supply specifications from the operation instruction manual to install the power supply (Please see Appendix A P9-1).
No-fuse breaker or fuse	There may be a higher input current when turning on the power supply. Please select an appropriate no-fuse breaker or fuse.
Magnetic contactor	When mounted a magnetic contactor (MC) at the power supply side, please do not use this MC to make a frequent ON and OFF operations to avoid failing the ac drive. The number of time to switch ON/OFF MC shall be one time in 30 minutes the utmost.
AC reactor (input side)	When connected to a power supply transformer with a higher capacity (above 600KVA) or switching over to phase capacitance may be desired, a current higher than the peak value will inrush into the input power supply circuit and damage the ac drive; therefore, additional mounting of AC reactor is recommended to improve the power while the wiring distance shall be within 10m.
Zero-phase reactor	Fitted to attenuate the low-frequency interference; especially for the locale with audio frequency device together with interference from the input & output sides reduced as well. The effective range is AM frequency channel 10MHz.
EMI filter	Can be applied to weaken the interference from electromagnetic waves.
Brake resistance/ Brake module	Mounted to shorten the deceleration time for motor. Please see the details in Chapter 8.(Optional)
AC reactor (output side)	When wired from the output side to motor, the wiring length of motor will affect the magnitude of voltage back wave. An additional mounting of AC reactor is recommended when the wiring length of motor is longer than 20 meters (the closer the wiring length to the AC drive side, the better the effect will be).(Optional)

Mounting the brake control circuits

Mounting the brake resistor for overheating protection

To mount the brake resistor (Accessory Model No.: LSDR, please refer to P8-3 for the specifications of resistance unit) onto AC drive for overheating protection.

0.4KW～11KW AC Drive(200V class /400V class)

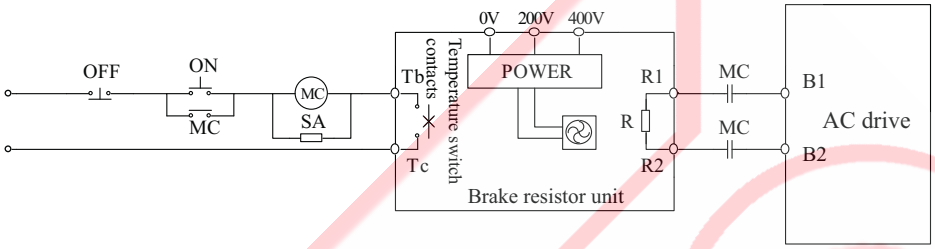

15KW～375KW AC Drive (200V class/400V class)

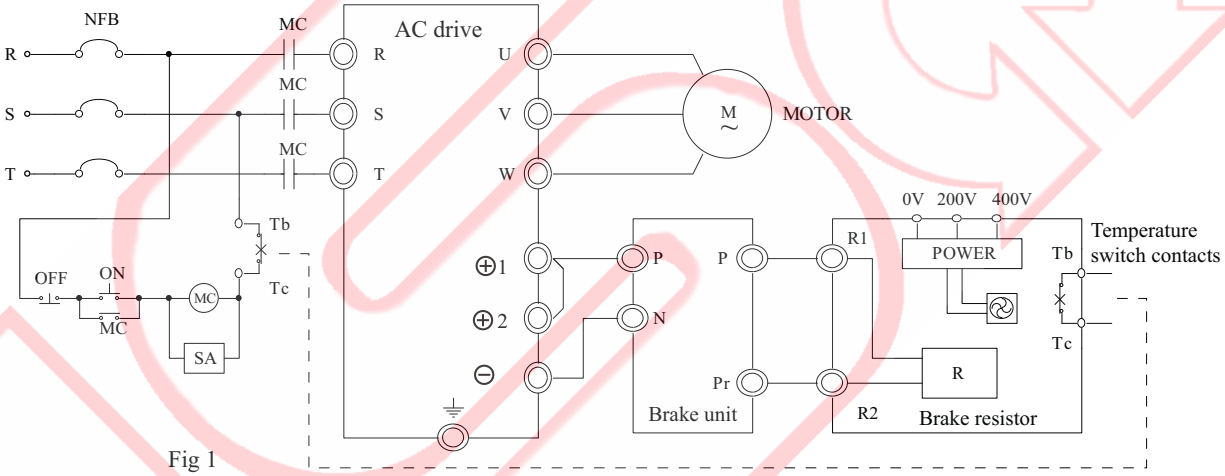

Fig 1

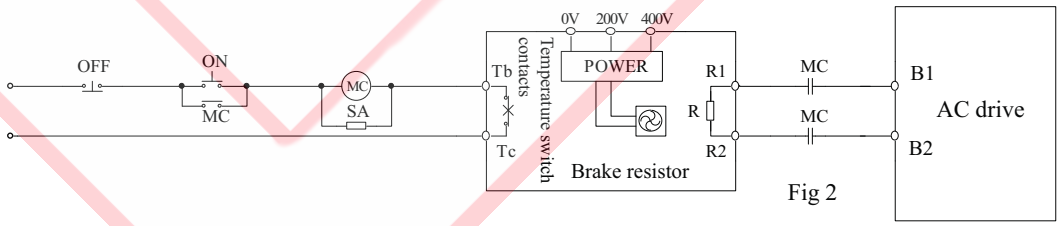

Fig 2

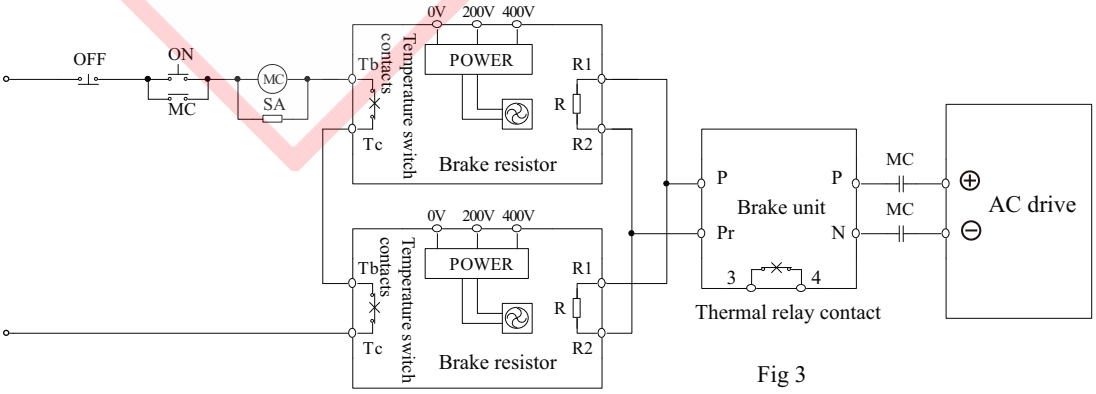

Fig 3

Primary Loop Terminal Block

Synopsis of new-old notes main-circuit terminal blocks

Old terminal note	New terminal note	Descriptions
R/L1, S/L2, T/L3	R/L1, S/L2, T/L3	Power supply input terminal (single/three phases
U, V, W	U, V, W	AC motor actuator output, connecting the 3-phaseinduction motor
P, P1	⊕1, ⊕2	Power correction DC reactor connecting terminal;remove the short-circuit tab for installation
P, B	B1/⊕1, B2	Brake resistance connecting terminal; please purchase the optional item according to the selection table.
P, N	⊕1, ⊖	Brake unit connecting terminal (LSBR Series)
⏚	⏚	Grounding terminal, please follow the 200 V series third-type grounding and 400V series particular grounding from Electrical Code to ground the terminal.

◆ 0.4KW～11KW (200V / 400V Series)

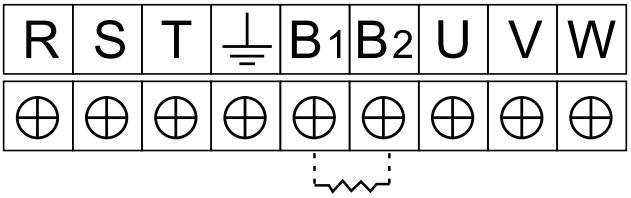

◆ 15KW～30KW(200VSeries)
15KW～37KW(400VSeries)

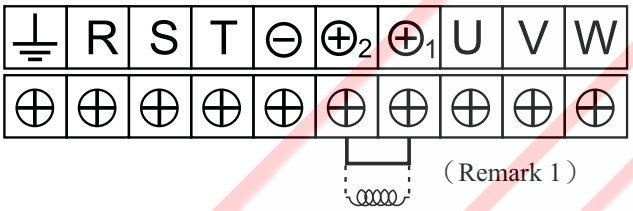

◆ 15KW～30KW(200Vfamily with BRAKE)
15KW～37KW(400Vfamily with BRAKE)

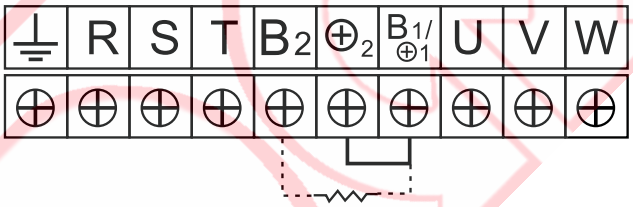

◆ 37KW～55KW(200V Series)
45KW～75KW(400V Series)

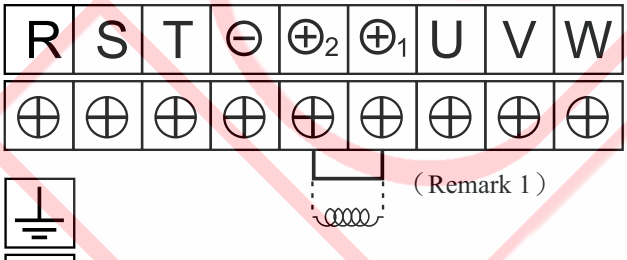

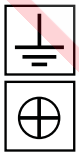

Grounding terminal is located at exterior of cabinet

◆ 37KW～55KW (200V family with BRAKE)
45KW～75KW (400V family with BRAKE)

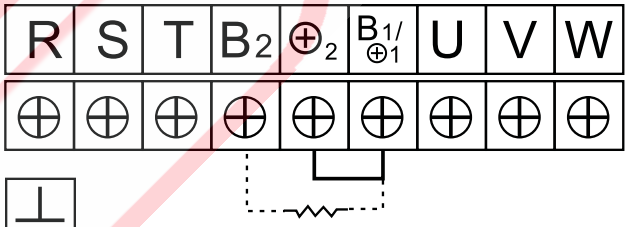

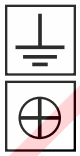

Grounding terminal is located at exterior of cabinet

◆ 75KW～110KW(200V Series)
90KW～375KW(400V Series)

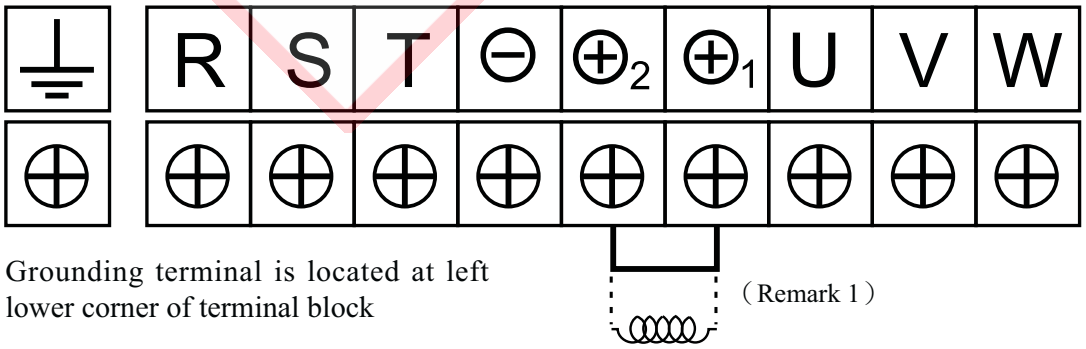

Grounding terminal is located at left lower corner of terminal block

Remark 1: When additionally mounted the reactor, please remove the shorting-strip.

Wiring Methodology

3-Phase Primary Loop Wiring Diagram -1

（LS800-20K4、LS800-20K7、LS800-21K5、LS800-22K2、LS800-24K0、LS800-25K5、LS800-27K5、LS800-2011)

（LS800-40K7、LS800-41K5、LS800-42K2、LS800-44K0、LS800-45K5、LS800-47K5、LS800-4011)

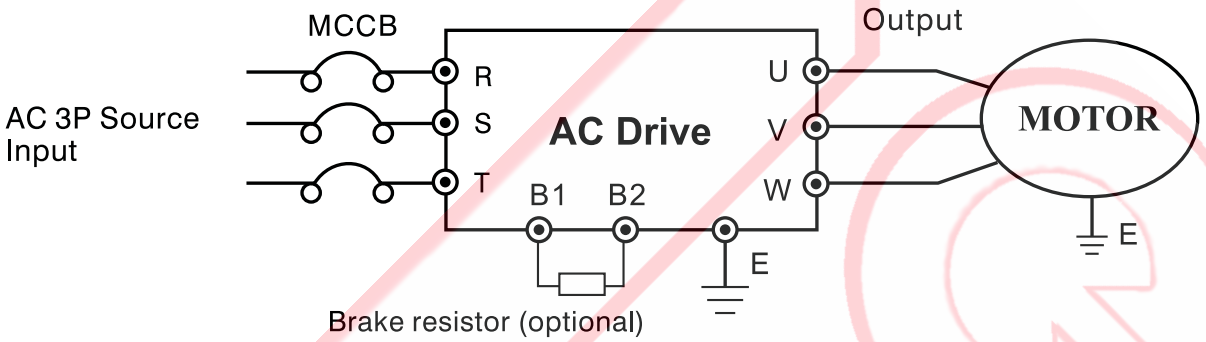

CAUTION

(1) Units in 3-phase 200V and 400V series with a hosepower up to 15HP are fitted a brake circuit. Please see P8-3 for selecting the correct resistance and the watt number.

(2) Each frequency ac drive and motor casing must be properly grounded to prevent lightening and electric shock.

3 Phase Source Terminal Block (0.4KW/0.5HP～11KW/15HP)

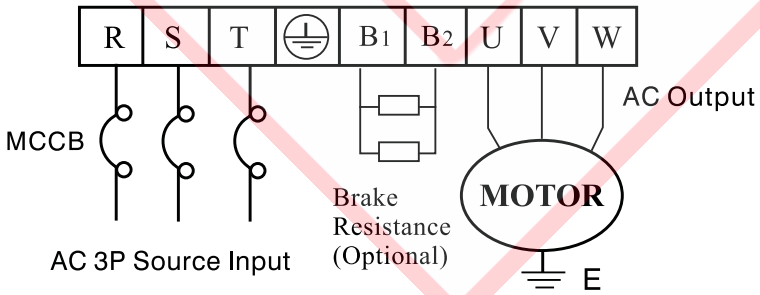

Symbol	Description
R.S.T	Connected to 3-phase power supply input
B_1.B_2	Can be connected to brake resistor; circuit has been embedded, additional mounting of brake unit is unnecessary.
U.V.W	To be connected to 3-phase motor output terminals
⏚ or ⏚	Grounding terminal

3-Phase Primary Loop Wiring Diagram -2

(LS800-2015、LS800-2018、LS800-2022、LS800-2030、LS800-2037、LS800-2045、LS800-2055、LS800-2075、LS800-2090、LS800-2110)

(LS800-4015、LS800-4018、LS800-4022、LS800-4030、LS800-4037、LS800-4045、LS800-4055、LS800-4075、LS800-4090、LS800-4110、LS800-4132、LS800-4160、LS800-4185、LS800-4220、LS800-4300、LS800-4375)

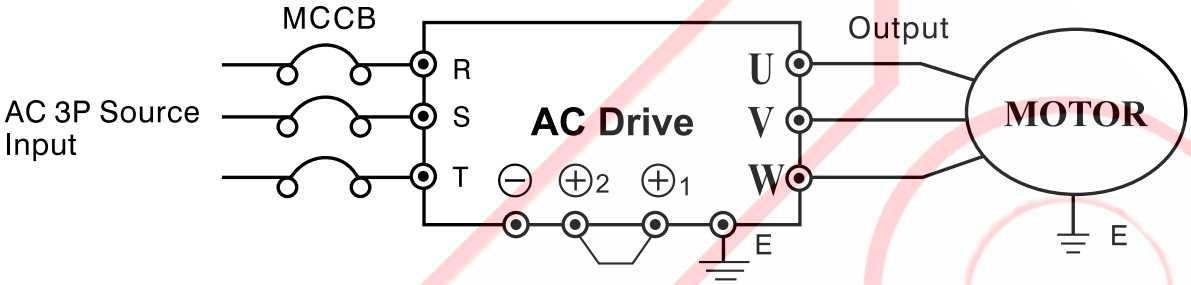

CAUTION

(1) A brake circuit is provided up to 20HP for 3p Series 200V and 400V. Refer to P8-1 for selecting correct resistance and wattage.
(2) The brake circuit of 20HP～100HP can be customized and fabricated inside the ac drive.
(3) Each ac drive must be properly grounded to prevent lightening and electric shock.

3p Source Terminal Block (Please see P2-4 for detailed descriptions)

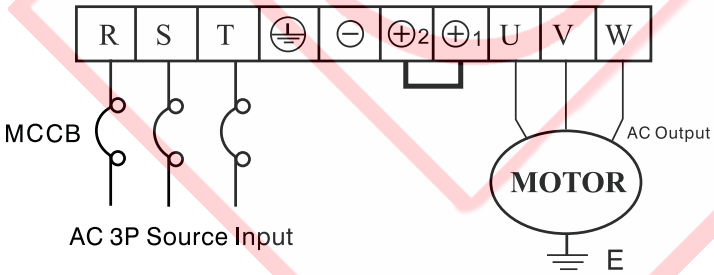

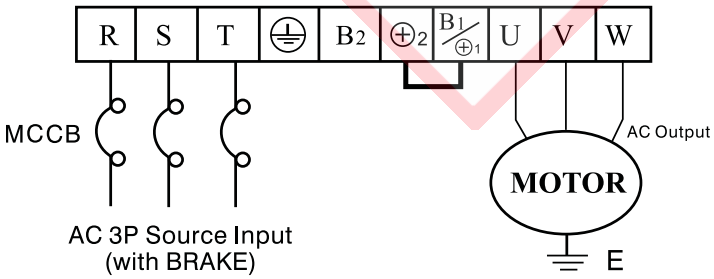

Symbol	Description
R. S. T	Connecting the AC 3-phase power supply input.
⊕, ⊖	P(+), N(-) terminal may be connected to external brake unit, but direct connection to brake resistance is not acceptable.
⊕1, ⊕2	To be connected to DC reactor.
B2, B1/⊕1	Can be connected to brake resistance; no external brake unit which is built in.
⏚ or ⏚	Grounding terminal
U. V. W	Output to connect 3-phase motor terminals

Notices to Wiring

(1) Primary Loop Wiring

1. Make sure that the connections of power supply for input terminals R.S.T, and output terminals U.V.W (to be connected to the motor) are correct; any wrong connection will lead to a serious damage of the AC drive.
2. Never connect any power factor capacitor, or LC, RC noise filter to the output end of the ac drive.
3. Keep the wirings of main circuit to the ac drive far away from signal cable of the control systems (e.g., PLC, electronic signal system) to avoid interference.
4. Please firmly fasten the screws on main circuit terminals to avoid any production of sparkling due to vibration-loosened screws.
5. The specifications for the distance between the power supply input and output in AC drive are described in the table below.

	Standard wiring length	Limit of wiring length
Distance form power supply system →to power supply side of ac drive	Within 2~30 meters	Within 30~300 meters
Output side of ac drive →Junction side of AC electric machinery	Within 2~25 meters	Within 25~200meters
Solution to solve the too-long wiring problem is shown in the right.	Additional mounting of input & output reactors is recommended.	Additional mounting of input & output reactors is a must.

WARNING

If the power line is too long, a parasitic capacitance will be produced from the electric machinery and power lines to the ground (lower potential side) that lead to a generation of high-voltage surge to destroy the voltage-withstanding insulation of AC drive and motor.

(2) Ground wire

1. For the purpose of safety and reducing the noise, please apply the third grounding type ⏚ to 200V series and special grounding type ⏚ to 400V series. (grounding impedance below 10Ω).
2. Avoid sharing the grounding electrodes and ground wire with other power facilities including the welding machine and dynamo-machines. Keep the ground wire far away from the power cable of large capacity equipment as applicable.

(3) Circuit breaker for wiring the main circuit – Electromagnetic contactor

To protect the loop, NFB, or an additional EM contact must be provided between the primary loop AC source and LS800 input terminals R.S.T. on the power side.

＊Use of Leakage Breaker :

1. **When an exclusive leakage breaker switch for the ac drive is used, please select to set an induced current of 30mA or greater for each ac drive.**
2. **If a general leakage breaker switch is used, please select to set an induced current of 200mA or greater and a time duration of more than 0.1s for each ac drive.**

(4) Surge Absorber

Any windings for the peripheral devices of ac drive, e.g., electromagnetic contactor, relay, solenoid valve, etc., must be connected in parallel with the surge absorber to prevent the noise interference. Please refer to the table below for selecting the surge absorber:

Voltage	Where Needed	Spec. of Surge Absorber
200V	Windings of large capacity other than relay	AC250V 0.5uf 200Ω
	Control relay	AC250V 0.1uf 100Ω
400V	Ditto	AC500V 0.5uf 220Ω

Primary Loop & Control Loop Routings Comparison Chart.

CAUTION

◎ Before wiring, confirm that the source voltage must comply with the rated input voltage of the ac drive.
◎ Please follow the regulations set forth in Electric Codes to select the specification of terminal crews and the size of wire diameter and firmly fasten them.
◎ The wiring on the side of the source input terminals（3ψ/R.S.T）will not affect the phase sequence; However, phase sequence exists when any two terminals of U.V.W. on the output side are changed and that will affect the revolving direction of the motor.

WARNING

◎ The wiring operation for the ac drive must be done only after the power source is cut off for operation safety.
◎ Please mount a no-fuse MCCB (Molded Case Breaker) at the power supply input side to turn on/off the power supply and protect the input end of the ac drive.
◎ Properly connect the ground wire to avoid possible electric shock or fire disaster.

Form (1) 200V Series

Spec. / Description	20K4	20K7	21K5	22K2	24K0	25K5	27K5	2011	2015	2018	2022	2030	2037	2045	2055	2075	2090	2110
Capacity KW/HP	0.4 / 0.5	0.75 / 1	1.5 / 2	2.2 / 3	4.0 / 5	5.5 / 7.5	7.5 / 10	11 / 15	15 / 20	18.5 / 25	22 / 30	30 / 40	37 / 50	45 / 60	55 / 75	75 / 100	90 / 125	110 / 150
3-Phase MCCB Rated Current (A)	5	10	15	30	40	50	60	100	125	150	175	225	250	300	400	450	500	550
Power wire gage (mm2)	2.0				3.5	5.5	8.0	14	30			50	60	80	100		150	
Primary loop screw	M4						M5		M6	M8			M10		M12			
Control loop wire gage (mm2)	0.5 mm² ~ 1.25 mm²																	

Form (2) 400V Series

Spec. / Description	40K7	41K5	42K2	44K0	45K5	47K5	4011	4015	4018	4022	4030	4037	4045	4055	4075	4090	4110	4132	4160	4185	4220	4300	4375
Capacity KW/HP	0.75 / 1	1.5 / 2	2.2 / 3	4.0 / 5	5.5 / 7.5	7.5 / 10	11 / 15	15 / 20	18.5 / 25	22 / 30	30 / 40	37 / 50	45 / 60	55 / 75	75 / 100	90 / 125	110 / 150	132 / 175	160 / 200	185 / 250	220 / 300	300 / 400	220 / 500
3p MCCB Rated Current (A)	5	10	15	20	30	40	50	60	75	100	125	150	175	200	225	250	275	300	350	400	450		
Power wire gage (mm2)	2.0			3.5		5.5		8.0		14	22	38		50	60	100				120			
Primary loop screw	M4						M5		M6			M8			M10		M12						
Control loop wire gage (mm2)	0.5 mm² ~ 1.25 mm²																						

Control Terminal block Location Reference Chart

LS800 Control board (Motherboard)

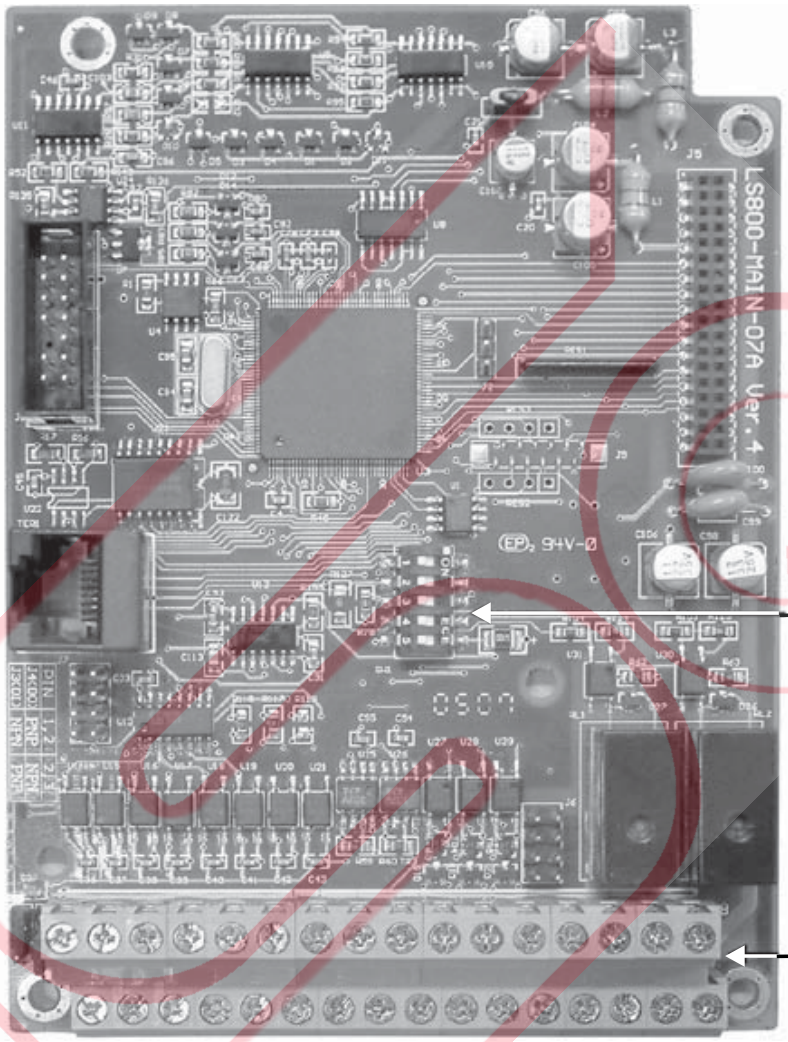

WARNING

(Note 1) Only a single unit of loop is allowed to start for use since the digital operator related to an internal communication mode and the external communication mode for SG-, SG+ are of different active and passive communication modes, thus are prevented from being connected for use at the same time.

◆ J3、J4 Sink/Source Branch Circuit Connector

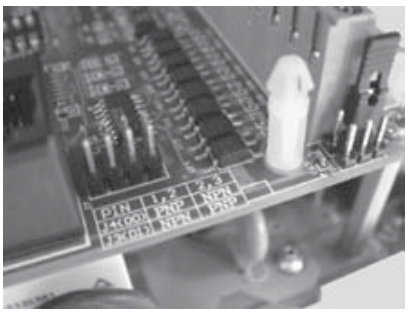

1. After completing the adjustment with J3 and J4, the logic of the I/O terminals may be switched into Sink Mode and Source Mode.
2. A detailed equivalent schematic view is given on P2-17、P2-18.

◆ SW1Function Toggle SW

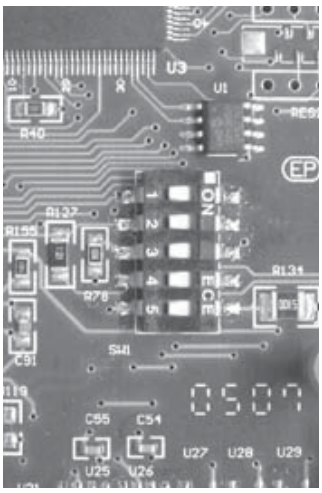

Description of SW1 Functions (RS485 Modbus set for internal and external uses).

NO.	Function	Toggle SW ON		Ex-factory Setup
1	SG-	External signal output to terminal block SG- (N1)		OFF
2	SG+	External signal output to terminal block SG+ (N1)		OFF
3	485 SW	OFF – internal digital operator in RS485 communication format (N2) ON – external digital operator in RS485 Modbus communication format.		OFF
4	120Ω Terminal R	Terminal R for internal and external RS485		ON
5	To set up V or A input mode to be inputted by AI terminal	OFF	ON	ON
		V Mode 0~10V	A Mode 0~20mA	

Note 1: External signals are for RS485 Modbus signal with SG- and SG+ input to the terminal block for external monitor with sources from PLC, or computer.

Note 2: The internal digital operator relates to the operation and control carried out by panel pushbuttons.

◆ LS800 Digital Operator Comm. Connector Spec.

1. RJ45: a short connector as illustrated to the left, instead of the universal one generally available in the market.

◆ LS800 RS485 Comm. Connector Spec.

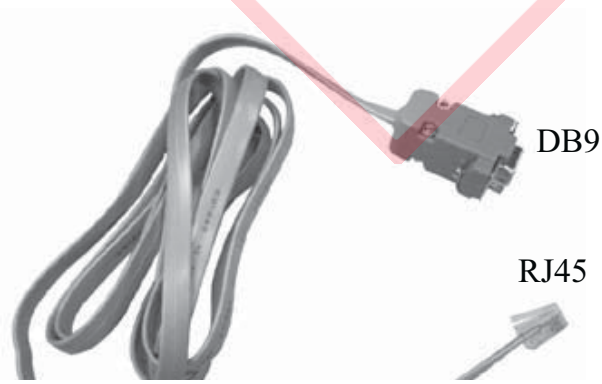

DB9	
Pin	
1	B(-)
2	A(+)
3	A(+)
4	X
5	⏚
6	+5V
7	B(-)
8	⏚
9	+5V

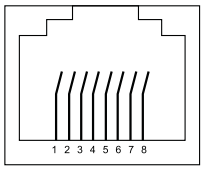

RJ45	
Pin	
1	+5V
2	⏚
3	B(-)
4	A(+)
5	B(-)
6	A(+)
7	⏚
8	+5V

◆ LS800 control terminals – wiring addresses and sequence are shown follows

NO.2.31

Di1	Di2	Di3	Di4	Di5	Di6	Di7	Di8	FM1	FM2	Do1	Do2	Do3	Ta1	Tb1	Tc1
SG-	SG+	AV1	AV2	AI	+10V	AVG	-10V	24V	COM	COM	COM	E	Ta2	Tb2	Tc2

◆ LS800 control terminals – wiring addresses and sequence are shown follows (Attached a PG-AB2 card)

NO.2.32

A	$\overline{A}$	B	$\overline{B}$	AO	BO	AO1	BO1	A1	B1	E	5V	0V	12V		
Di1	Di2	Di3	Di4	Di5	Di6	Di7	Di8	FM1	FM2	Do1	Do2	Do3	Ta1	Tb1	Tc1
SG-	SG+	AV1	AV2	AI	+10V	AVG	-10V	AVG	COM	COM	DCM	E	Ta2	Tb2	Tc2

1. Please use slender type "－" or "＋" (#101 screwdriver) screwdriver to unscrew the terminal screws on the terminal block, then route the wire from the wiring opening below the terminal block to connect respective terminal and firmly fasten the terminal screws. (Please refer to P2-11 for cautionary points when wiring the terminal block is desired)
2. Please see P2-13、P2-15and P2-20 in this Section for the tabulated descriptions of functions relevant to the variety of terminals in control terminal blocks and PG-AB2.

Wiring Connection of Control Circuit Terminals

Notices to Control Circuit Wiring

WARNING

Separation mesh connection must be provided between the control loop wiring and the terminal block and earthed. Improper wiring will cause serious interference and abnormal operation resulting in accident, personal injury and property loss.

- ☑ For safety concerns, select suitable specifications of wire gages for wiring connection in accordance with the Electric Code.
- ☑ For customers, please follow the national regulations relevant to power wiring connection locally.
- ☑ Control circuit wiring: Wire to connect the control circuit wirings after separating the main circuit wiring from other power cable electricity wires; if interlacing the wiring connection is necessary, please make it in a cross connection of 90 degrees.
- ☑ Communication cables for all I/O control signals or remote digital operation setup unit must be separated far away from large current power cables (source, motor, brake) as applicable, and shall never be provided in the same cable conduit.
- ☑ As long as the indicating lamp of digital operation panel is on never attempt to connect or remove any cable.

Analog input terminals (AV1, AV2, AI, AVG)

☑ Connecting to a weak analog signal is easily interfered by external noise, therefore, the wiring length for connection shall not be too long (less than 20m is recommended), and a shielding wire shall be used. Moreover, the peripheral meshed wires to the shield wires shall be well grounded; for a bigger induced noise, connection to AVG terminal can access a better effect.

☑ When connecting the external analog signal output is desired, an error action may taken place due to the interference produced from the analog signal output and the AC motor actuator; when encountered such a situation, connecting the external analog output side to a capacitor and a ferrite core can inhibit the noise. Such a connection is shown in the right figure. :

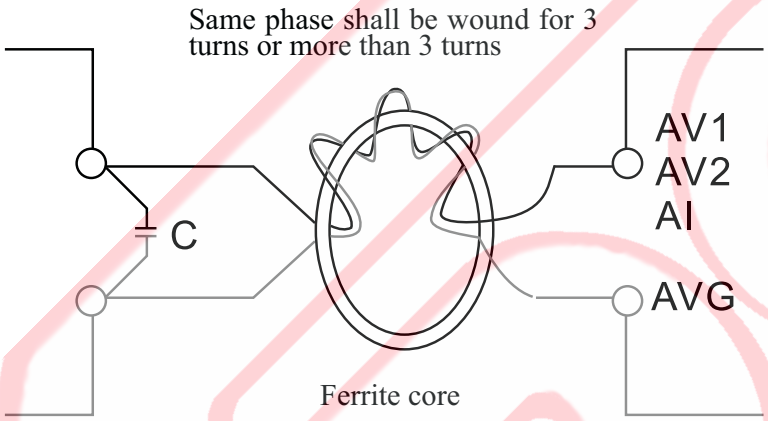

Digital input terminals (Di1～Di8, COM)

☑ Multifunctional input terminals are characterized as dry contacts that cannot be input any signal source with voltage; when a contact is to be enabled for input control, in order to avoid any occurrence of bad contact, a contact with high reliability to contact the weak signals should be used.

Do output (Do1, Do2, Do3, DCM)

☑ When enabling the control relay is desired, a surge absorber or a flywheel diode shall be connected in parallel to both ends of exciting coil while attention shall be made to the correctness of polarity for connection.

Schedule of Control Terminal Function (NO.2.31)

Terminal Mark		Terminal Designation	Description		Remarks
Multi-function Input Terminals	Di1	Forward rotation command	Forward revolution when Di1-COM is ON; and stop, OFF		Control
	Di2	Reverse rotation command	Reversal revolution when Di2-COM is ON; and stop, OFF		Control
	Di3	Input in case of external Abnormality(NC)	AC Drive trips off to stop when external abnormality signal is ON. (Err 29)		Control
	Di4	Abnormality reset	Di4 ON releases the status imposed and maintained by the circuit protection action against failure.		Control
	Di5	Multi-section command 1	To execute four-section speed control with binary 2Bit.		Control
	Di6	Multi-section command 2			
	Di7	Jog inching frequency	To execute the inching frequency operation when enabled ON.		Control
	Di8	Free-run	When activated (ON), the drive immediately stops outputting.		Control
	COM	Digital Input common terminal	The multi-function input terminals of the common terminal		Common point
Analog frequency setup	+10V	Source for F setup	Source output DC+10V for frequency setup (maximal 10mA allowed)		Source
	–10V	Negative source for F setup	Auxiliary negative source output DC-10V for F setup (maximal –5mA allowed)		Source
	AVG	Common terminals for F setup	Common reference potential terminal for F setup input signals (terminal AV1.AV2.AI)		Common point
	AV1	Analog voltage F command	With input voltage at DC0~±10V (or DC0~+10V), the input impedance is 15kΩ		Signal source
	AV2	Analog voltage F command	With input voltage at DC0~+10V, the input impedance is 30kΩ		Signal source
	AI	Analogy current F command	With input current at DC4~20mA, the input impedance is500kΩ (or DC0~+10V, 30KΩ)		Signal source
Multi-function Output Terminals	DO1	Zero-Speed detected	ON in stop status or below zero-speed level		Control
	DO2	Consistent F	ON when the output F at any setting is over the detected F.		Control
	DO3	Overload forecast	On when the drive detection output is over the OL level		Control
	COM	Digital output common terminal	The multi-function output terminals (FM analog output) of the common terminal		Common point
	24V	Auxiliary source for terminal	Auxiliary source 24V/200mA MAX. for I/O terminals		Source
	Ta1	Output in normality (NC) 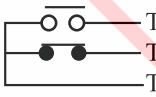	1a and 1b contacts function to output when the abnormality protection mechanism of the drive is activated.		Contact
	Tb1		*Ta1-Tc1 is ON in case of abnormality Contact	Contact Capacity: AC250V 1A DC30V 1A	Contact
	Tc1		*Tb1-Tc1 is OFF in case of abnormality Contact		Contact
	Ta2	In Operation 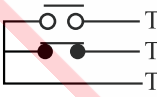	1a and 1b contacts function to output when the F to activate the output of ac drive is above the value as preset.		Contact
	Tb2		*Ta2-Tc2 is ON during operation Contact	Contact Capacity: AC250V 1A DC30V 1A	Contact
	Tc2		*Tb2-Tc2 is OFF during operation Contact		Contact
	FM1	Analog output, FM	Multi-function analog monitor 1, DC0~10V/100% FM meter head		Signal
	FM2	Analog output, amperage monitor	Multi-function analog monitor 2, DC+~+10V/100% ac drive rated A.		Signal
COM	SG+	RS-485 series com interface	RS-485 series com jack, positive end input		COM
	SG–	RS-485 series com interface	RS-485 series com jack, negative end input		COM
	E	Earth cable terminal	Exclusively for the shielded cable to connect the selected earth shielded cable use.		Earth

CAUTION

INHIBIT

Whereas the control block is characterized by empty contact, no signal source carrying voltage should be inputted; otherwise, the AC drive will be damage.

LS800 Control Circuit Terminal Block Wiring Diagram(NO.2.31)

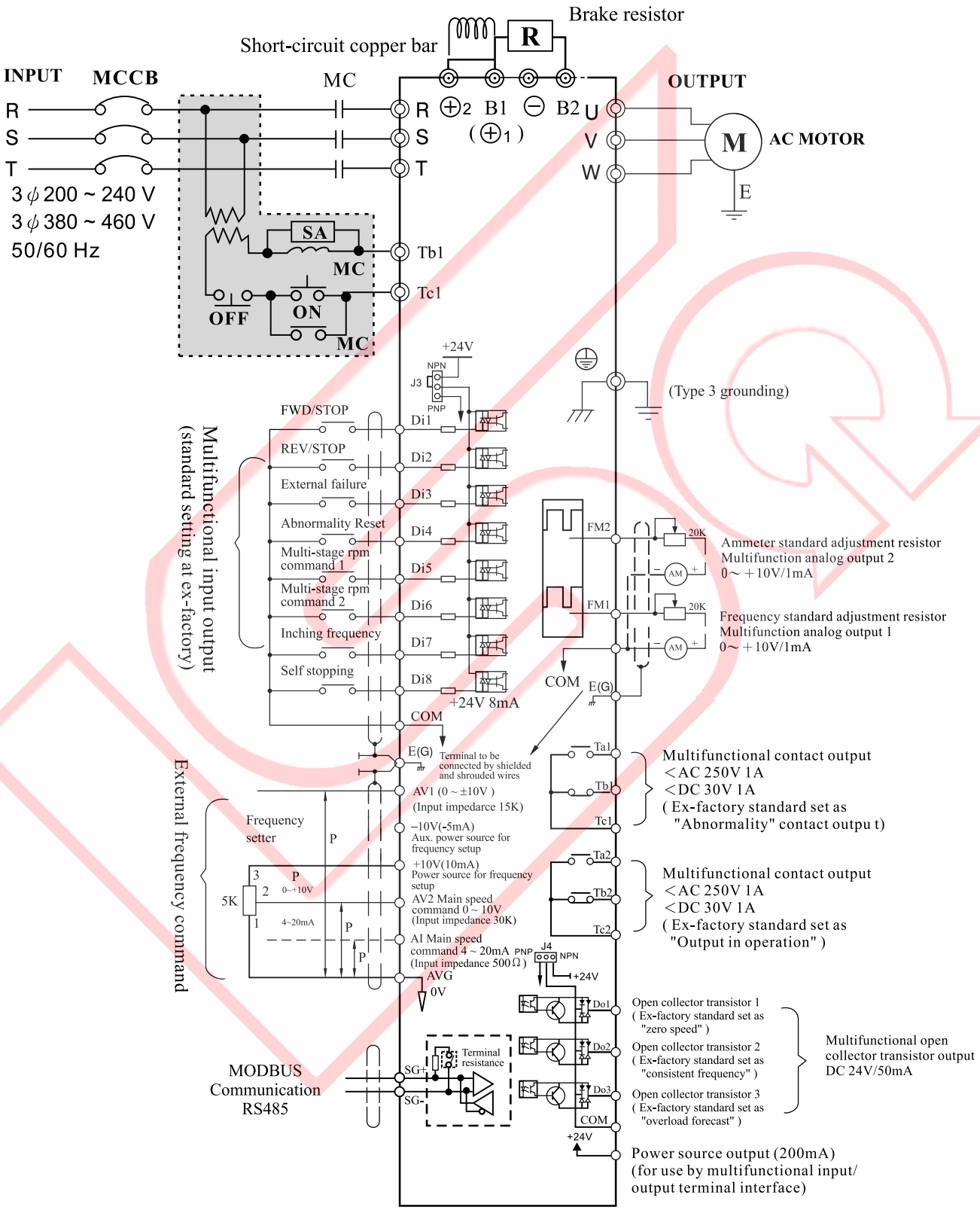

Schedule of Control Terminal Function (NO.2.32)

Terminal Mark		Terminal Designation	Description		Remarks
Multi-function Input Terminals	Di1	Forward rotation command	Forward revolution when Di1-COM is ON; and stop, OFF		Control
	Di2	Reverse rotation command	Reversal revolution when Di2-COM is ON; and stop, OFF		Control
	Di3	Input in case of external Abnormality(NC)	AC Drive trips off to stop when external abnormality signal is ON. (Err 29)		Control
	Di4	Abnormality reset	Di4 ON releases the status imposed and maintained by the circuit protection action against failure.		Control
	Di5	Multi-section command 1	To execute four-section speed control with binary 2Bit.		Control
	Di6	Multi-section command 2			
	Di7	Jog inching frequency	To execute the inching frequency operation when enabled ON.		Control
	Di8	Free-run	When activated (ON), the drive immediately stops outputting.		Control
	COM	Digital Input common terminal	The multi-function input terminals of the common terminal		Common point
Analog frequency setup	+10V	Source for F setup	Source output DC+10V for frequency setup (maximal 10mA allowed)		Source
	–10V	Negative source for F setup	Auxiliary negative source output DC-10V for F setup (maximal –5mA allowed)		Source
	AVG	Common terminals for F setup	Common reference potential terminal for F setup input signals (terminal AV1. AV2. AI)		Common point
	AV1	Analog voltage F command	With input voltage at DC0~±10V (or DC0~+10V), the input impedance is 15kΩ		Signal source
	AV2	Analog voltage F command	With input voltage at DC0~+10V, the input impedance is 30kΩ		Signal source
	AI	Analogy current F command	With input current at DC4~20mA, the input impedance is500kΩ (or DC0~+10V, 30KΩ)		Signal source
Multi-function Output Terminals	DO1	Zero-Speed detected	ON in stop status or below zero-speed level		Control
	DO2	Consistent F	ON when the output F at any setting is over the detected F.		Control
	DO3	Overload forecast	On when the drive detection output is over the OL level		Control
	DCM	Digital output common terminal	The multi-function output terminals of the common terminal		Common point
	Ta1	Output in normality (NC) 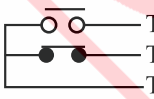	1a and 1b contacts function to output when the abnormality protection mechanism of the drive is activated.		Contact
	Tb1		*Ta1-Tc1 is ON in case of abnormality Contact	Contact Capacity: AC250V 1A DC30V 1A	Contact
	Tc1		*Tb1-Tc1 is OFF in case of abnormality Contact		Contact
	Ta2	In Operation 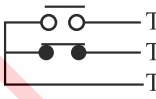	1a and 1b contacts function to output when the F to activate the output of ac drive is above the value as preset.		Contact
	Tb2		*Ta2-Tc2 is ON during operation Contact	Contact Capacity: AC250V 1A DC30V 1A	Contact
	Tc2		*Tb2-Tc2 is OFF during operation Contact		Contact
	FM1	Analog output, FM	Multi-function analog monitor 1, DC0~10V/100% FM meter head		Signal
	FM2	Analog output, amperage monitor	Multi-function analog monitor 2, DC+~+10V(or 4~20mA) /100% ac drive rated A.		Signal
COM	SG+	RS-485 series com interface	RS-485 series com jack, positive end input		COM
	SG–	RS-485 series com interface	RS-485 series com jack, negative end input		COM
	E	Earth cable terminal	Exclusively for the shielded cable to connect the selected earth shielded cable use.		Earth

Whereas the control block is characterized by empty contact, no signal source carrying voltage should be inputted; otherwise, the AC drive will be damage.

LS800 Control Circuit Terminal Block Wiring Diagram(NO.2.32)

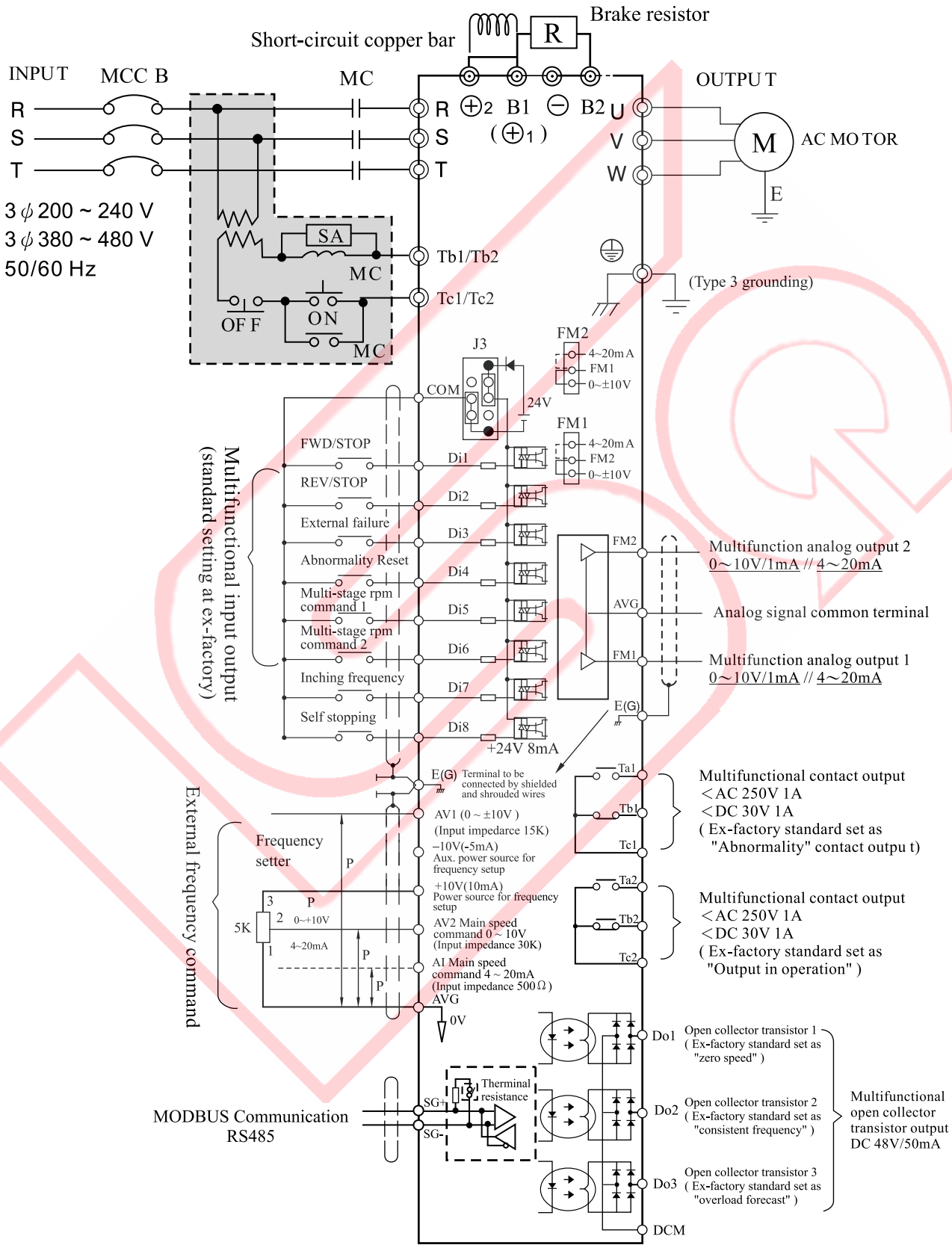

Coping with Sink Mode/Source Mode

◎ With the use of J3 (branch circuit connector), the logic of the input (Di1~Di8) terminals may be switched to Sink Mode or Source Mode

◎ With the use of J4 (branch circuit connector), the logic of the input (Do1~Do3) terminals may be switched to Sink Mode or Source Mode.

Table: Sink Mode, Source Mode and Signal Input（NO.2.31）

	Digital Input (D – in) Mode	Digital Output (D – out) Mode
Sink Mode	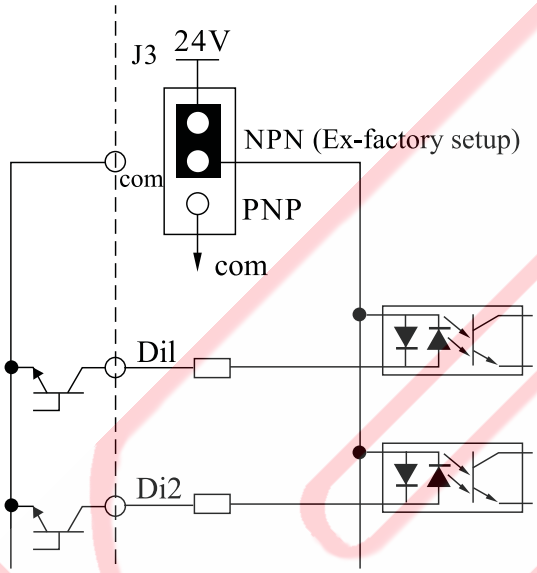	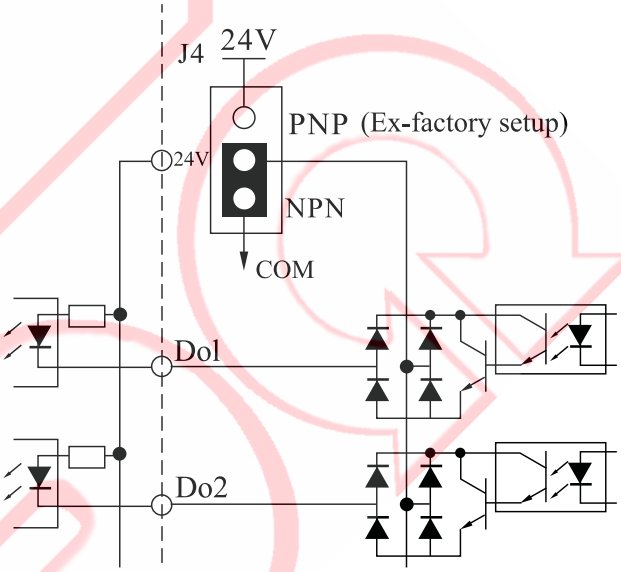
Source Mode	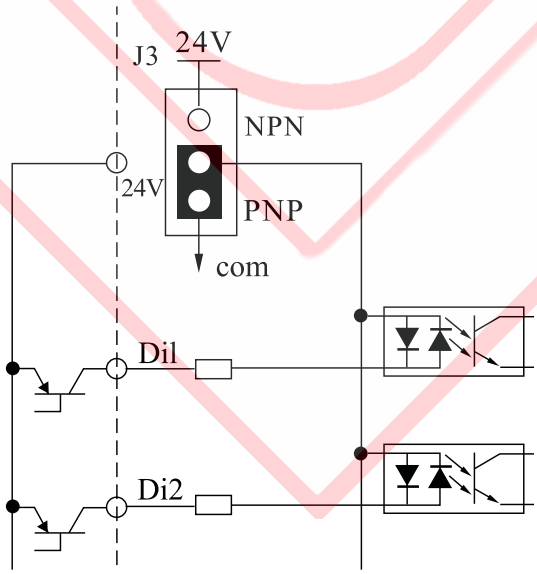	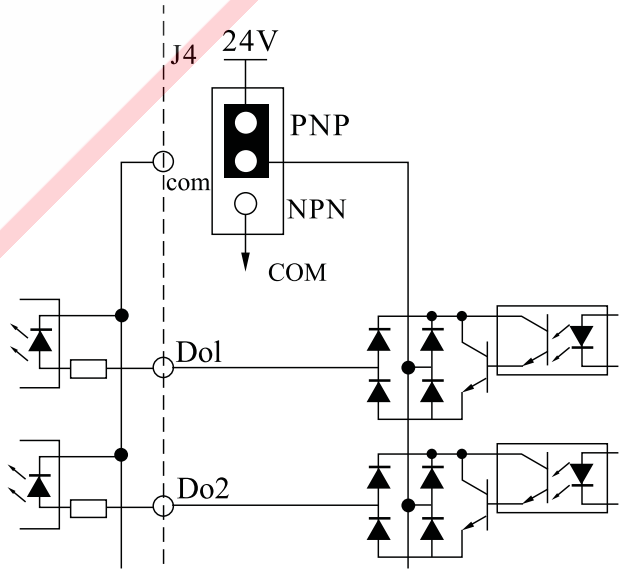

※ The external power supply for Sink mode、Source mode and the signal input, please refer to the scripts of P2-18.

Internal / external wire for input mode power supply coping with Sink / Source mode

◎ After the use of J3 (circuit jumper), it can switch the logic of the input terminal over to SINK mode (0V common)/SOURCE mode (+24V common). Furthermore, in order to increase the degree of freedom for the signal-inputting method, it is adaptable to external +24V as well.

Table: Sink Mode, Source Mode and Signal Input （NO.2.32）

	Adaptive to internal power supply	Adaptive to external power supply
Sink Mode	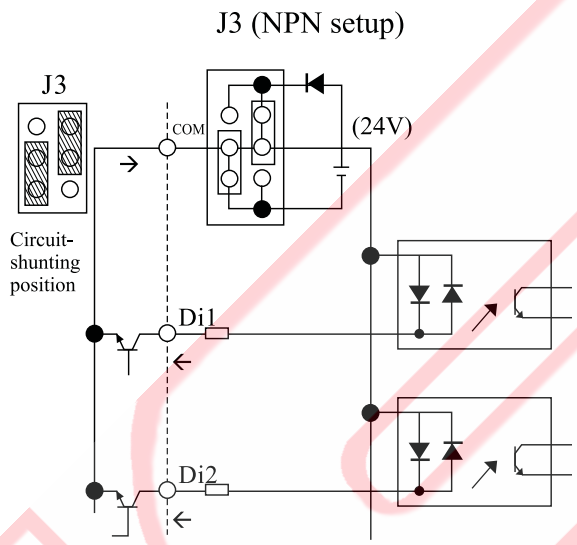	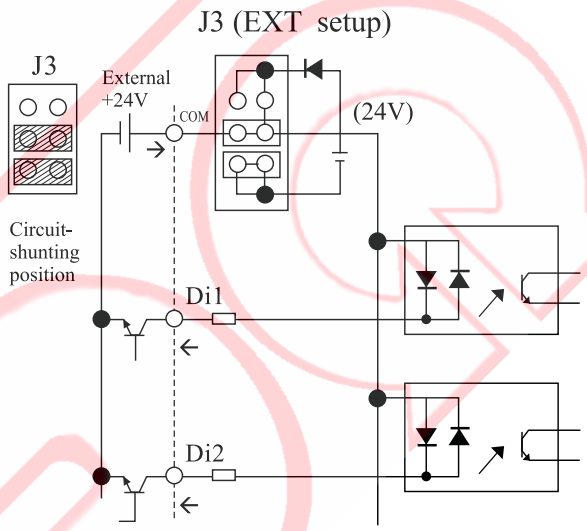
Source Mode	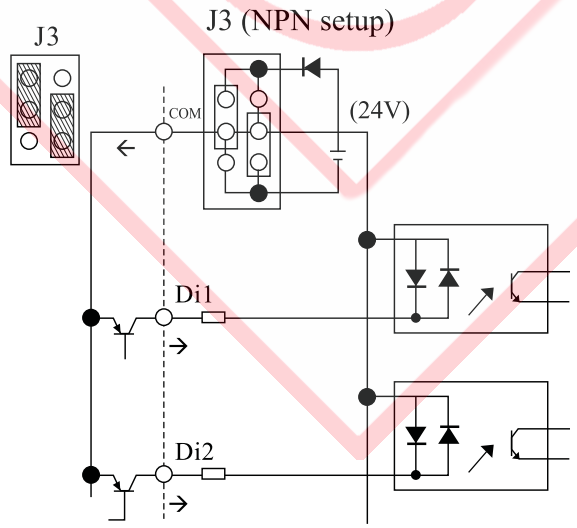	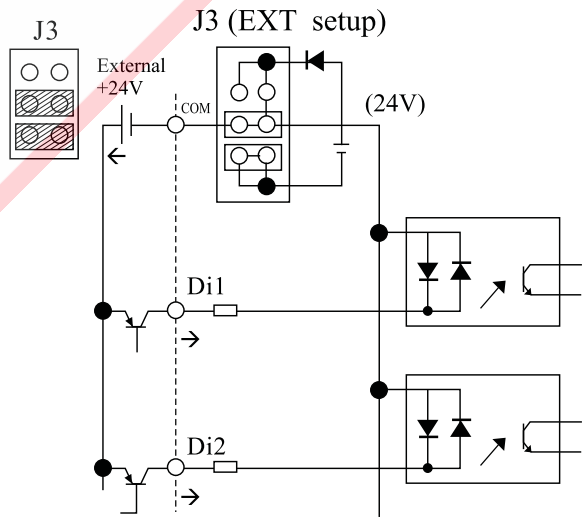

PG-AB2 Installing and Wiring

Installing Procedure:

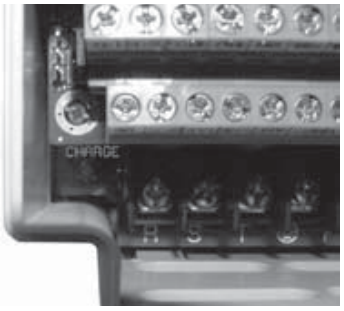

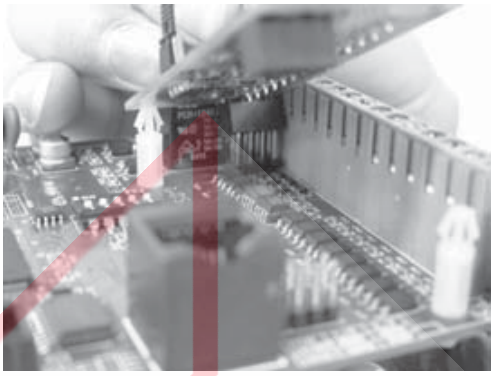

1. Before installing the option card, confirm the power indicator (CHARGE) inside the component of the ac drive is OFF, then remove the digital operator and the lid to facilitate installation.

2. Never exercise excessive force during installation.Firmly press in the direction as illustrated (from top to bottom) to place the golden fingers, which to be engaged and laterally pressed to secure.

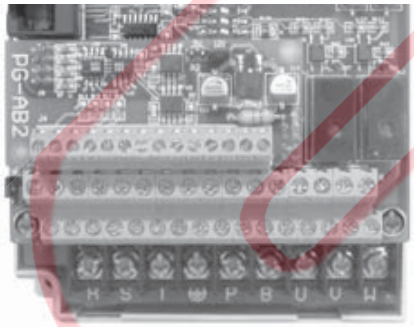

3. Check for any missing parts upon completing the installation before restoring the lid to subject to feeding test.

WARNING

Before feeding, make sure that terminal block screws and wiring are firmly secured. In case of any problem found with any mechanical part, do not try to repair at own efforts; instead, you should contact the genuine maker or its authorized dealer to solve the problem.

PG-AB2(Optional) :

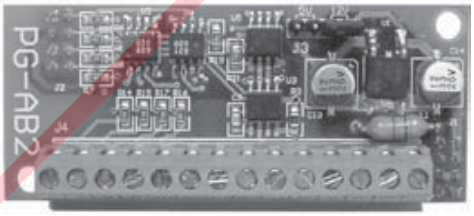

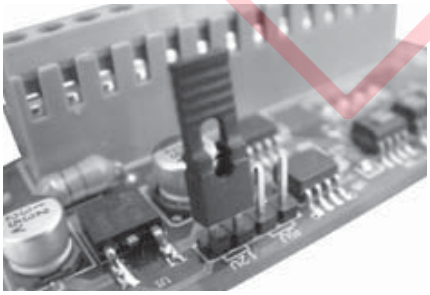

The J3 control signal source adjustment Jump used for the second unit encoder (Terminals A1, B1) is essentially for the determination for the pulse generator of having +5V or +12V at the jump in the right upper corner as the input. External wiring diagram and PG-AB2 terminals and specification are given detailed description and notes in P2-20~P2-24.

PG Speed Control Card(option card)

PG-AB2 Terminals & Specification

Terminal Mark	Description	Specification
E	Shielded cable connection ground terminal	—————
A	Phase A pulse input (+)	※ Adaptable to Line Driver, Encoder with 5V or 12V source of complementary and open collector transistor, A, B. Phase signal output. ※ Maximal response frequency 300 KHz. ※ If open collector transistor type of input is used, connect Phase A and Phase B terminals to source terminals of 12V encoder.
$\bar{A}$	Phase A pulse input (–)	
B	Phase B pulse input (+)	
$\bar{B}$	Phase B pulse input (–)	
AO	Phase A pulse monitor output	※ The maximal for Phase A and Phase B open collector transistor output is DC 5V/30mA. ※ Maximal response frequency 300 KHz
BO	Phase B pulse monitor output	
5V	Pulse generator dedicated source	DC+5V (±5%), 200mA (max.)
12V		DC+12V (±5%), 200mA (max.)
0V		DC 0V (+5V and +12V share the common grounding terminal)
A1	Phase A pulse frequency command input	For Phase A and Phase B, the input is done by open collector transistor type (0~300 KHz). (Select J3 according to the specification.
B1	Phase A pulse frequency	
AO1	Phase A pulse frequency command monitor output	※ Phase A and Phase B open collector transistor output, DC 5V/30mA (max.) ※ Maximal response frequency 300 KHz
BO1	Phase B pulse frequency command monitor output	

WARNING

While installing PG-AB2 Speed Control Card, confirm that the CHARGE indicator in the ac drive is OFF.

◎ 1 : Refer to the table given on PG-AB2, and the voltage specification of the encoder installed while exercising the PG speed control.

◎ 2 : A set of "speed feedback control input" is provided on PG-AB2 card to accept the complementary type input from Line Diver, or open collector transistor type input; a "frequency command input, allowing control of speed command ratio by taking advantage of the multiplication setup frequency ratio F155; and two sets of "pulse monitor output", for exercising synchronous operation speed command source and monitor.

◎ 3 : Always use the shielded wire on the signal line.

◎ 4 : Do not use the PG source for any purpose other than PG, or error may present due to noise.

◎ 5 : Maintain the PG wiring not greater than 100M, and keep it far away from the power cable as applicable.

◎ 6 : Determine the revolving direction for PG according to F150 (to set up the direction for the encoder PG). The initial setting relates to Phase A taking the lead when the motor is revolving clockwise.

CAUTION

To avoid accident due to interference, proper shielded wire must be secured for signal wiring adapted to elevator or only remote control; negligence in this caution will result in personal injury and property loss.

PG-AB2 Wiring Diagram

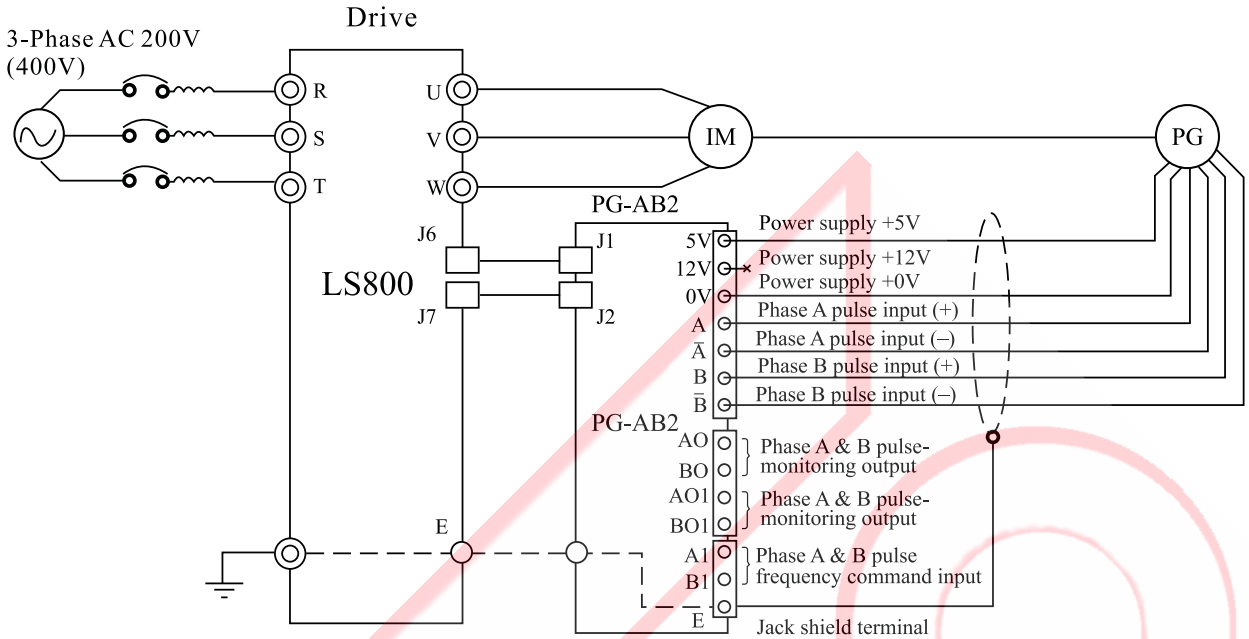

There are two types, 5V and 12V, of internal source for PG-AB2, confirm PG source specification before wiring.

◎ The PG output pulse detected is 300kHz max.

◎ The PG output frequency (FPG) may be solved by the following formula:

$$\text{FPG(Hz)} = \frac{\textbf{Motor revolving speed at the highest frequency output}}{60} \times \text{PG Constant(p/rev)}$$

Make available other sources if the PG source capacity is 200mA or above. Installation of additional capacitor at the source end or the similar measure is needed if the exercise of transient power interruption process is a must.

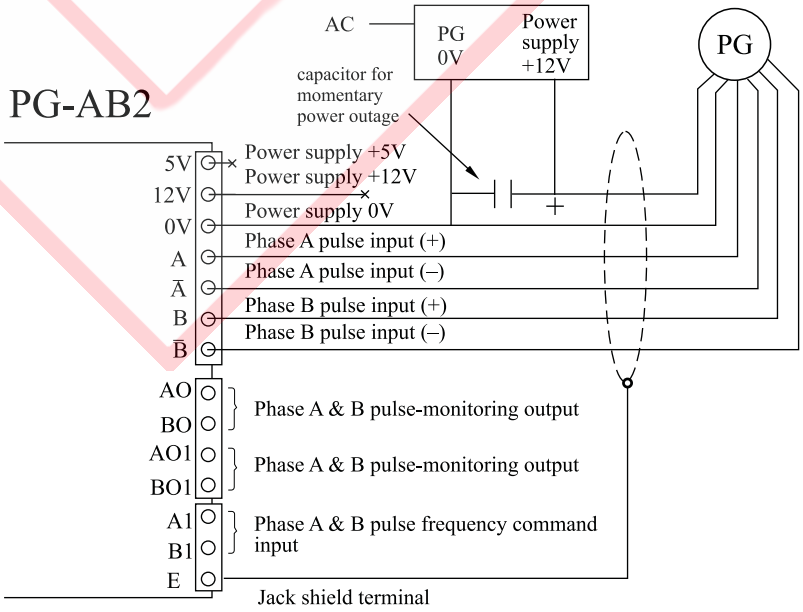

PG-AB2 I/O Circuits Construction Chart

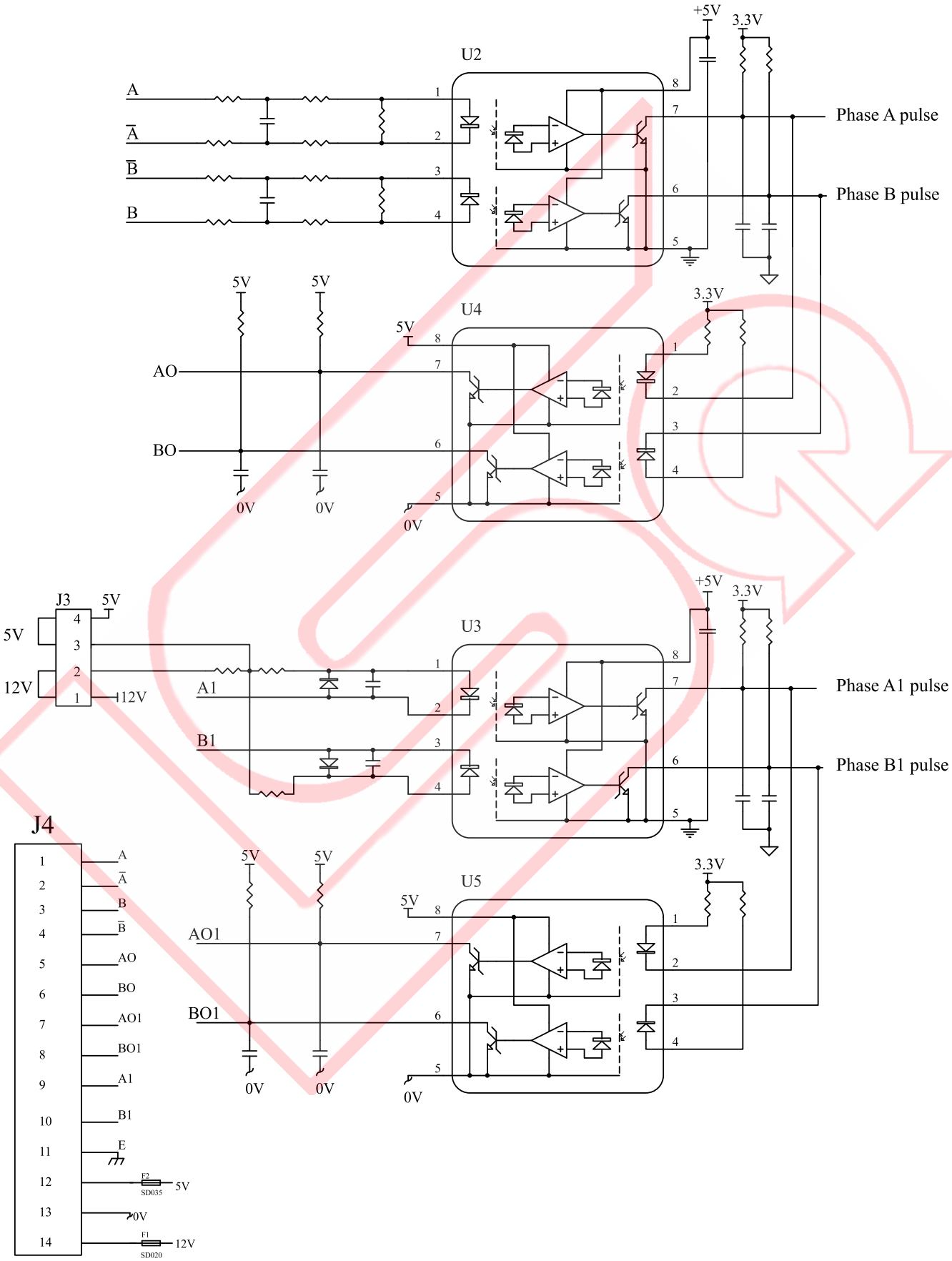

Open collector transistor input wiring diagram

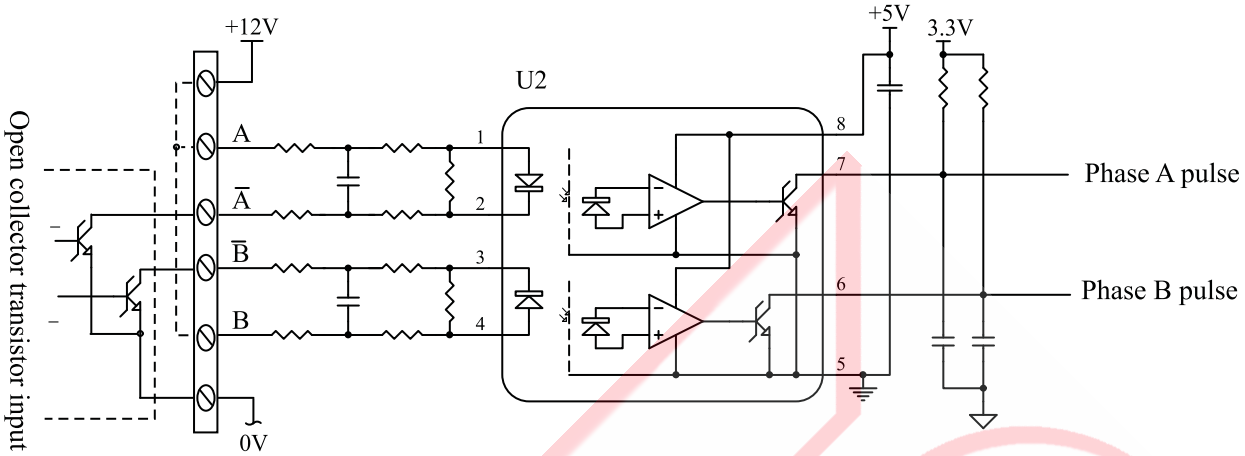

PG-AB2 Input mode setup

PG-AB2 input mode setup

◆ F150 Programmer (PG) input direction = 1:A leads B

- Phase A, B pulse trains, Phase A leads Phase B by 90 degrees for FWD (Positive/negative edge trigger) (fourfold frequency multiplication)
- A1, B1 are pulse trains input by frequency speed command

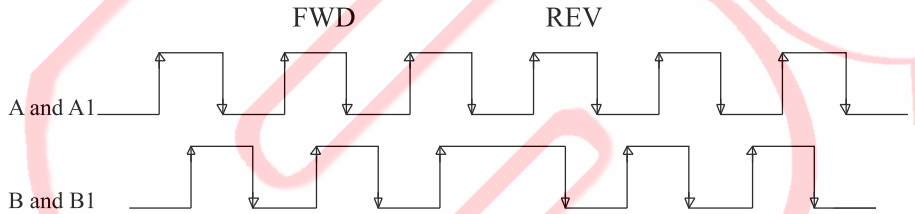

◆ F150 Programmer (PG) input direction = -1:B leads A

- Phase A, B pulse trains, Phase B leads Phase A by 90 degrees for REV(Positive/negative edge trigger) (fourfold frequency multiplication)
- A1, B1 are pulse trains input by frequency speed command

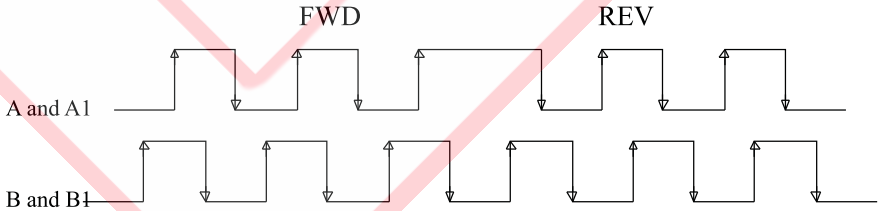

◆ F150 Programmer (PG) input direction = 0:one-way feedback/command

- Phase A is a pulse train
- A1 is a pulse train input by frequency speed command, phase B1 is for direction while symbol L is for REV and H for REV.

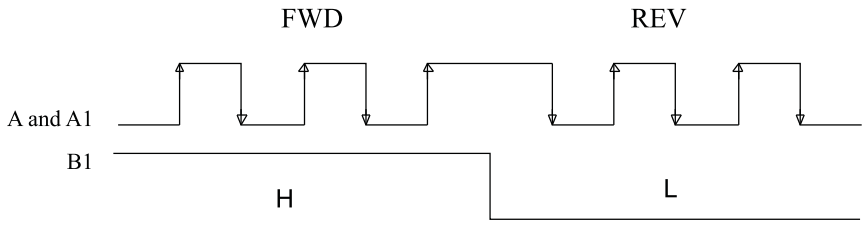

PG feedback for operation & test confirmation:

(1) Please mount the PG feedback card before energizing the power supply; also please pay attention to the Encoder-needed voltage is 5V or 12V; enable the power supply after the completion of wiring connection. (※Caution: Wrong input of power source and polarity to the encoder will burn the Encoder and the PG feedback card)

(2) Firstly establish the motor parameters in nameplate F141~F146, and perform F147=2: Open-loop scalar control so that the FWD command at 10Hz can be taken to start the motor running.

(3) During the operation, please check if the rotating direction of motor is correct; switch over any two phase lines amid the wires (U.V.W.) of motor if the direction is wrong.

(4) Set up the constant rpm feedback F148=1: Programmer (PG), F149- Number of pulse of Programmer (PG), F150- Direction of Programmer (PG); and perform F147=2: Open-loop scalar control to take the forward rotation command at 10Hz to actuate the motor' s running; and during the operation, press ➤ to check if the direction, frequency of Programmer (PG) are identical to the direction of forward rotation command; if the direction of Programmer (PG) is different from the direction given from the frequency command, please perform the following steps for confirmation:

Steps for confirmation :

FWD command

Wrong commanding direction

n. denotes REV with rpm feedback from PG

Correct commanding direction

n. denotes FWD with rpm feedback from PG

Troubleshooting:

■ Problem 1: No display of rpm feedback from PG.

Solution: Please check if the phase sequence and polarity of power supply, A & Ā and B & B̄ is correct.

■ Problem 2: Error between the frequency command and the rpm feedback from PG.

Solution: There will be a load and a slip frequency generated from the motor operation that leads to a little error between the frequency command and the rpm feedback from PG; the error range should be ±0.5Hz or so; if there is a big error range, please examine if the number of pulse set to F149 Programmer (PG) is correct and if the net grounding wire is at good condition.

(5) Perform F147=0: Electric parameter detection (Pr_RL) after the completion the foregoing steps and follow a success detection to set F147=5: Close-loop vector control for servo actuation and torque control; high-precision control and speed response is obtainable.

※ **<u>For the steps of electric parameter detection, please see P4-2 for the description of auto-tuning.</u>**

Main power source circuit diagram

200V Series Models : (LS800-20K4～LS800-2011)	400V Series Models : (LS800-40K7～LS800-4011)

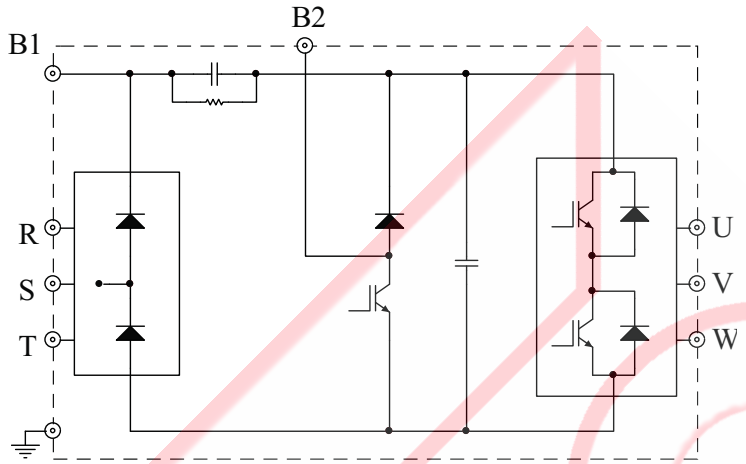

Models : LS800-2015～LS800-2110，LS800-4015～LS800-4450

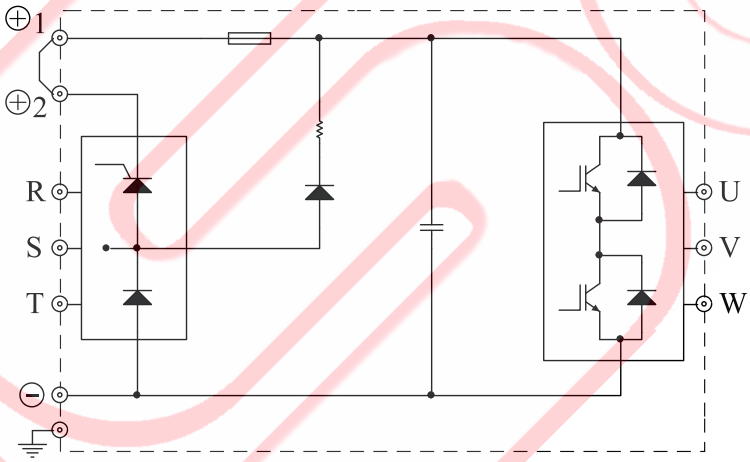

Models : LS800-2015～LS800-2055，LS800-4015～LS800-4075 (With Brake circuit loop)

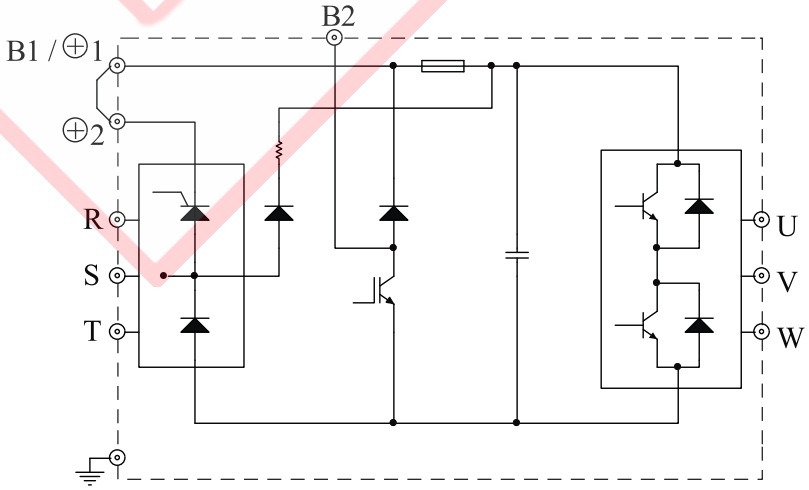

III Digital Operator Panel

- Location&Designation of Digital Operator.....3-1
- Function description of keys.....3-2
- Parameter Setup Mode.....3-3
- Operator Control Mode.....3-4
- Multi-function Digital I/O Terminals Status Display Inspection.....3-5

Location & Designation of Digital Operator

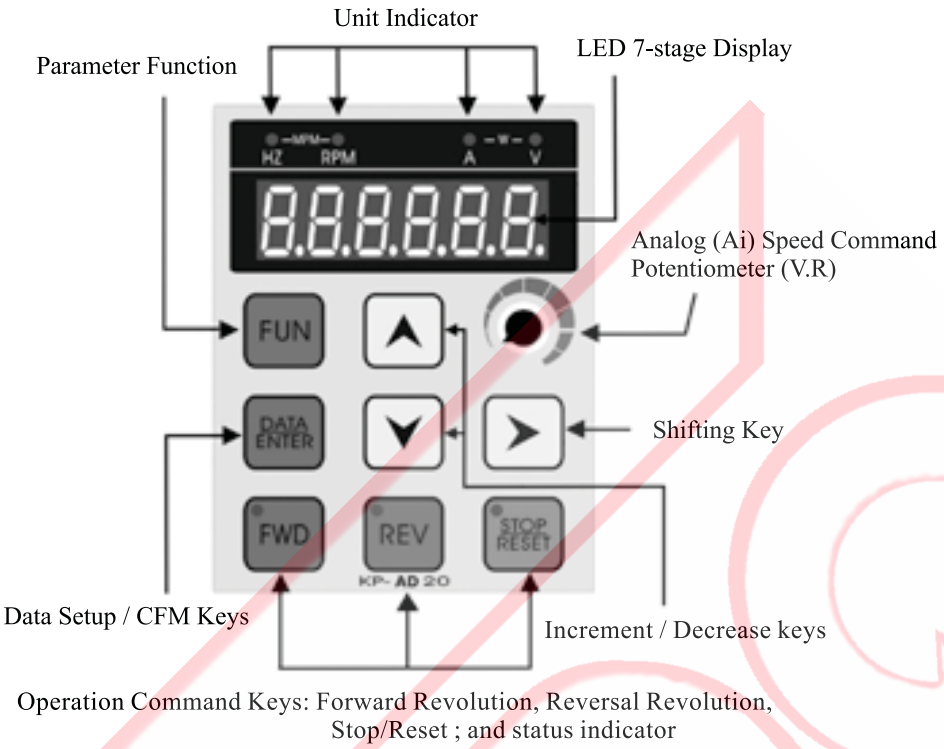

Functions of Digital Operator Panel

The operation panel is able to perform the functions of running ,shutdown,and frequency setup,monitoring the running status, parameter setup and failure display , etc.

Storing Parameters

Save each and all parameter settings that have been confirmed and complied with the purposes as demanded in the commissioning into EEPROM of DSP (F209=1).

Duplicating Parameters

SAVE(1) Save the ac drive parameters into the digital operator by selecting Parameter F209 : Save Present Parameters – 1: Save to Digital Operator.

RECALL(2) Power off to remove the digital operation panel and install it to another AC drive; recall the duplicated parameter to the RAM in the DSP by selecting Parameter F208: Recall Parameter (source)=2: Parameter of Digital. Operator before selecting saves to EEEPROM in DSP to complete parameter duplication for another unit of AC drive.

WARNING

When the vector control mode is selected to duplicate any parameter of F147=5,6 for example, make sure that the electric machinery features must be consistent; otherwise, perform once the Auto-tuning of electric and mechanical parameters.

Funcution description of keys :

Classification	Key	Brief Description of Function
Control/ Parameter Key	FUN	Enter into Parameter Function Mode key.
	DATA ENTER	To read, and write parameter settings.
		To confirm and enter data, and save the data at DSP (interior of EEPROM) automatically.
Shift/ Increase, Decrease Keys	➤	To move the position of flashing cursor rightward to select the place for data entry.
		∗ Each depress of right-shift key will enable a cyclic display during the operation. ➤ F: Frequency Comm. ➤ H: Reference frequency ➤ A: Output current ➤ E : Output voltage ➤ n : PG Encoder Speed ➤
	▲	To execute numeric increase for parameter encoding and setting.
		To perform the frequency setting under operation control mode by setting the F5: Frequency command source=0 to the digital operation panel.
	▼	To execute numeric decrease for parameter encoding and setting.
		To enter into F0 to monitor variety of displays under the operation control mode.
Operation Command Key	FWD	To execute the operation command in forward resolution, and turn on the LED indicator.
		To serve as a function key to execute the stop running command ,when setting the revolving direction is not limited to the FWD command
	REV	To execute the operation command in reversal resolution, and turn on the LED indicator.
		To serve as a function key to execute the stop running command ,when setting the revolving direction is not limited to the REV command
	STOP RESET	To execute the stop running command.
		To execute reset in case of abnormality; and return to the original setting in parameter setup mode.
Revolution Speed Command		Speed control for operation panel AV(V.R.) when F5=frequency command source=1

Quick & cyclic display functions during operation

Each press of ➤ key from digital operation panel is able to cyclically display the functions in the following order: Frequency Command→Output frequency→Output current→Output voltage→PG Encoder Speed.

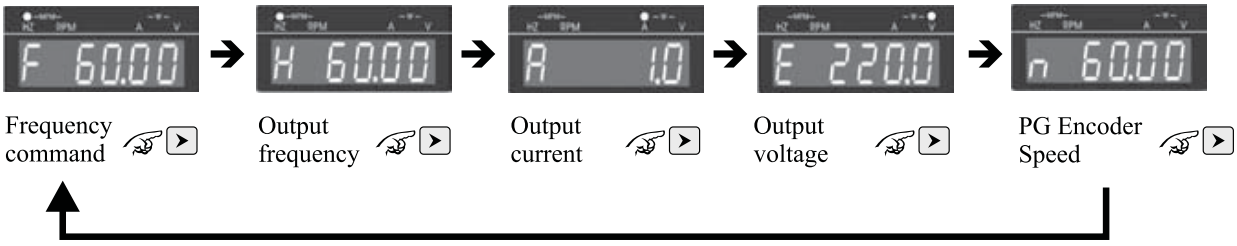

Parameter Setup Mode

This mode is for changing the set values of internal parameters. Please use the increment, decrement, and shift keys to change the parameter settings, and press the ENTER/DATA key to save the changed data in DSP (interior EEPROM) automatically and exit the setup mode. For more details of parameters, please see the "Summary of parameter setting" in the Appendix C

Parameter Setup Mode Flow Chart

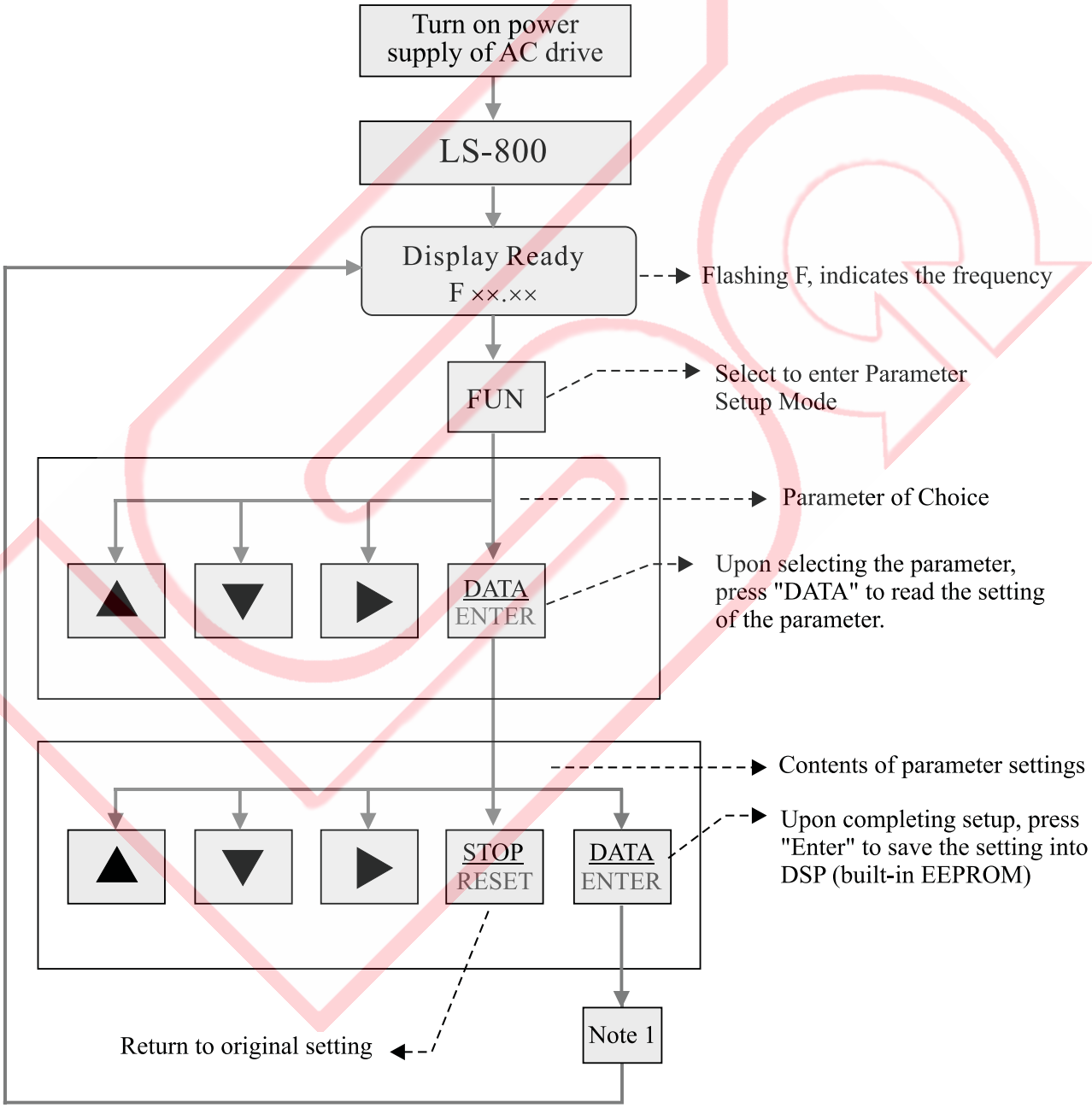

◎Note 1：Make sure to save each and all parameter setting that have been confirmed and complied with the purpose as demanded in the commissioning into the DSP(built-in EEPROM), if copying the parameters is desired, please save the parameters of ac drive into the Digital Operation Panel; or select parameter F209: Save the current parameter to mobile phone = 1:save to Digital Operation Panel.

Operator Control Mode

The flow chart of the operator control mode is given below. This mode is for monitor display in the control of control operation and frequency display commands, output frequency, output amperage and output voltage, as well as the display of abnormality nature and records. For details of parameters, refer to Appendix C "Schedule of Parameter Settings".

Operator Control Mode flow

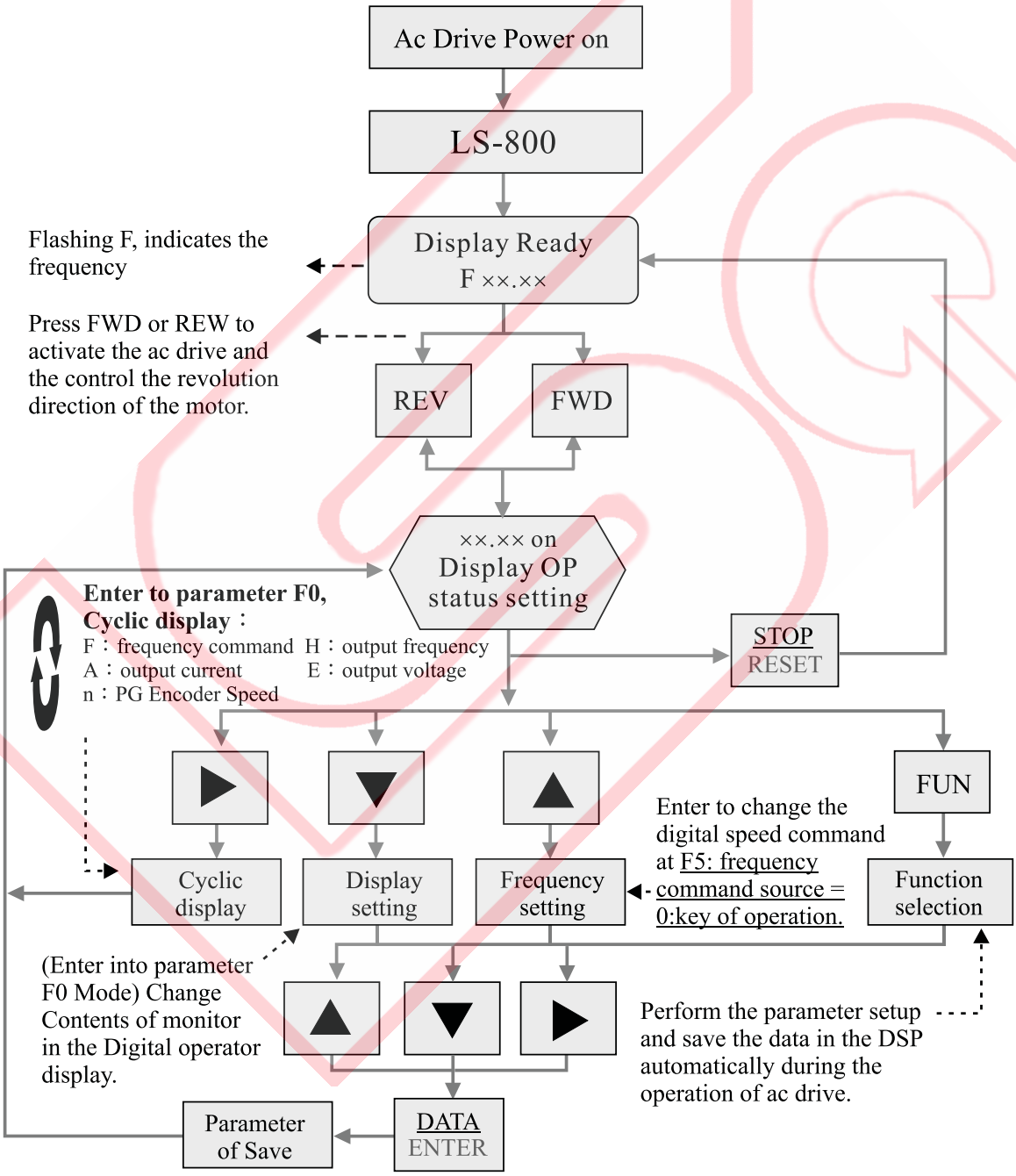

Note 1：If the speed signal source dose not fall on F5 (frequency command source) = 0：Digital Operation panel mode the Digital speed command input is ineffective.

Multi-function Digital I/O Terminals Status Display Inspection

F0 : Display Status Setting = 22 (Multi-function digital input terminal status)

Multi-function Parameter → F74 F73 F72 F71 F70 F69 F68 F68

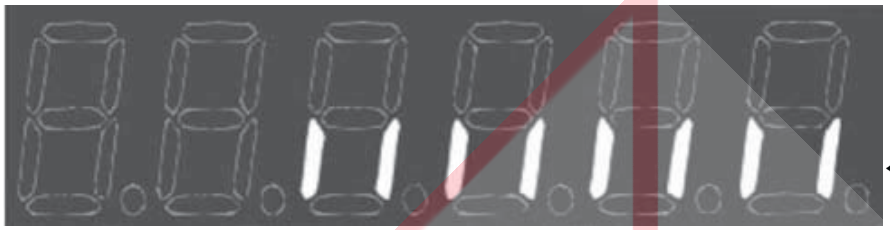

← Display in OFF Status

Multi-function Terminal → Di8 Di7 Di6 Di5 Di4 Di3 Di2 Di1

Multi-function Parameter → F74 F73 F72 F71 F70 F69 F68 F68

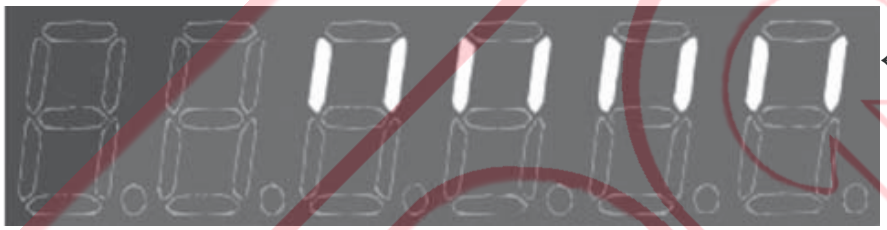

← Display in ON Status

Multi-function Terminal → Di8 Di7 Di6 Di5 Di4 Di3 Di2 Di1

F0 : Display Status Setting = 23 (Multi-function digital input terminal status)

Multi-function Parameter → F75 F79 F78 F77 F76

← Display in ON Status

Multi-function Terminal → RL1 RL 2 Do3 Do2 Do1

Brake acting function

Multi-function Parameter → F75 F79 F78 F77 F76

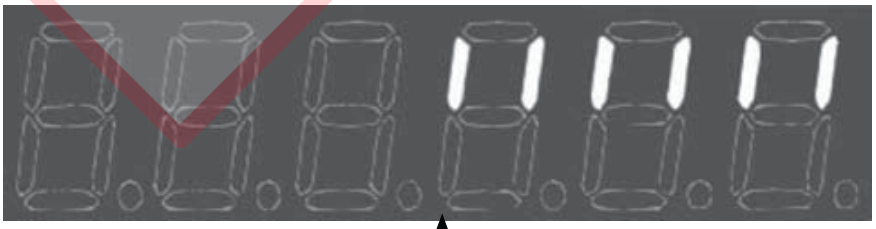

← Display in OFF Status

Multi-function Terminal → RL1 RL2 Do3 Do2 Do1

Brake acting function

IV Test Run

- Commissioning Operation.....4-1
- Auto-tuning Function.....4-2
- Auto-tuning Funing Process Flow Chart.....4-4
- Basic Parameter Setup.....4-5
- Quick operation parameter setup block diagram.....4-6

Commissioning Operation

Inspection before operation:

◎ After the completion of wirings and before supplying the power for test run, please go through the following checkups:

1. Check if wirings are correct. 「input terminals R.S.T shall be wired to power supply while output terminals U.V.W shall be connected to 3-phase induction motor」. Phase reversal at input/output terminals is not allowed.
2. Look around the interior and all the wiring terminal blocks inside the ac drive to see if there are any wire chips of leads; make sure to remove them thoroughly.
3. Check if terminals and screws, etc. components are firmly and tightly fastened.
4. Check if there is short-circuit or grounding among the terminals.
5. Check if the voltage of the input power supply is the same as the rated voltage of the ac drive.

   200V class : Single / 3-phase AC200～240V 50/60Hz

   400V class : 3-phase AC380～480V 50/60Hz

Commissioning:

◎ The AC drive has been ex-factory set at F147 = 2, i.e., the Open loop V/F Control Mode, or select the operation mode according to F147 as detailed in P5-38~P5-39，F4 = 0 i.e., the operation control method is PB Operator, and F5 = 1, the command source is the potentiometer (V. R) control. Before feeding for commissioning, turn the potentiometer (V.R) knob counter-clockwise before inputting the power. Carry out the commissioning according to the steps given below:

1. Power ON.
2. Confirm the display status is shown the target frequency. (F ××.××)。
3. Enter into operation control mode (Press keypad [FWD] to enter forward operation control.)
4. Enter speed command (Turn the potentiometer knob found on the operator slowly clockwise to run the commissioning at a frequency within 10Hz).
5. Press keypad [STOP] to slow down and stop the motor.

Operation Checklist:

◎ If the revolving direction of the motor is correct (Interchange any two of the phase lines to change the motor's direction of rotation.)

◎ Check if motor runs smoothly.

◎ Check if motor vibrates abnormally

◎ Check if acceleration and deceleration are smooth.

◎ Check if output load current is normal（Press the ▼ key to access parameter F0=2: output current, or ➤ right-shift cyclic key to monitor the output load currents.)

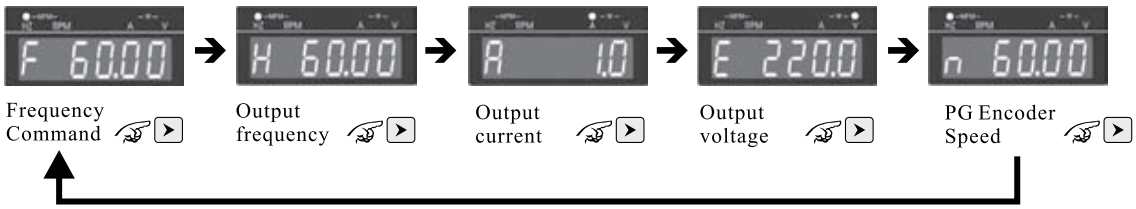

Auto-tuning Function

Auto-tuning Elements

◎ If F147 = 5: Closed Loop Vector Control, 6: Sensorless Vector Control is selected as the control mode, auto tuning must be performed prior to the drive operation.

◎ Before executing the auto tuning function of parameters, it is necessary to establish the followingparameters in accordance with the capacity data specified in the nameplate of motor: F141：Rated Voltage, F142：Rated Current,F143：Rated Frequency,，F144：Rated speed, (rpm)，F145：Rated HP, and F146：Number of Polarity of Motor(P).

◎ Select F4 (Operation Control Signal Source) = 0：Digital Operation panel before performing the auto-tuning.

Note: Dynamic parameter tuning: After executing the forward rotation command to run the motor at 2/3 speed (40Hz) of the rated frequency for about one minute, the detection and measurement of motor parameters at no-load or below 50% load is available.

CAUTION

When performing the Auto-tune, the motor must be separated from the machine if motor's running will generate an unsecure status or uncertain factor.

Parameter Auto-tune

◆ Parametric tuning (F147) -1: Static electric parameter detection: This function is designed for those machinery equipments coupled with heavy duty that fails the detection of dynamic parameters; however, it shall be used in association with the setup of parameter F160 (motor's no-load current %) so that the motor's electric parameter group (F156~F159) can be detected in full while the accuracy in this regard is lower than the 0: Electric parameter detection.

◆ Parametric tuning (F147) -0: Electric parameter detection: To execute an automatic tuning for static and dynamic parameters.

◆ Upon performing electric parameter auto-tuning, the ac drive will continue to perform functions of static parameter auto-tuning and dynamic parameter auto-tuning. It is feasible to automatically detect those electric characteristics of the motor and automatically set up the motor electric parameter group in the software. Perform the auto-tuning according to the following steps:

1. Set up the control mode (F147) at 0: Electric Parameter Detection to perform the parameter auto-tuning.
2. Press keypad "FWD or REV" for the ac drive to display Pr-RL to start outputting DC to the motor for providing Stage 1 static mode parameter auto-tuning in advance, and Stage 2 dynamic parameter auto-tuning for the revolution type of the motor.
3. If the auto-tuning has been successfully executed, the ac drive will automatically set up the electric characteristics of the motor and save them into corresponding parameters F156~F160.
4. If F147 = 5(Closed Loop Vector Control) Mode is required, perform the F147 = 1 (Machinery Parameter Detection) auto-tune. The setting of the parameter modulation will affect the response of the vector speed (PI) control. During the auto-tune, the ac drive displays Pr-Jm; the dynamic parameter modulation of the revolution type of the motor will

be performed, and the modulation setting will be saved into Parameter F161. (Refer to Prompt 2.)

5. Modify the control mode (F147) =5: Closed Loop Vector Control, and 6: Sensorless Vector Control.

PROMPT:

1. With the speed precision highlighted within the high speed area (approximately 100% or greater of the rated speed , Please set F121 to be ranging 0.90~0.95.
2. When Parameter F147 is set at 1 for performing auto-tuning of mechanical parameter, PG feedback device must be provided each to the AC drive and the motor before carrying out machine parameter test and detection.

Auto-tuning Funing Process Flow Chart

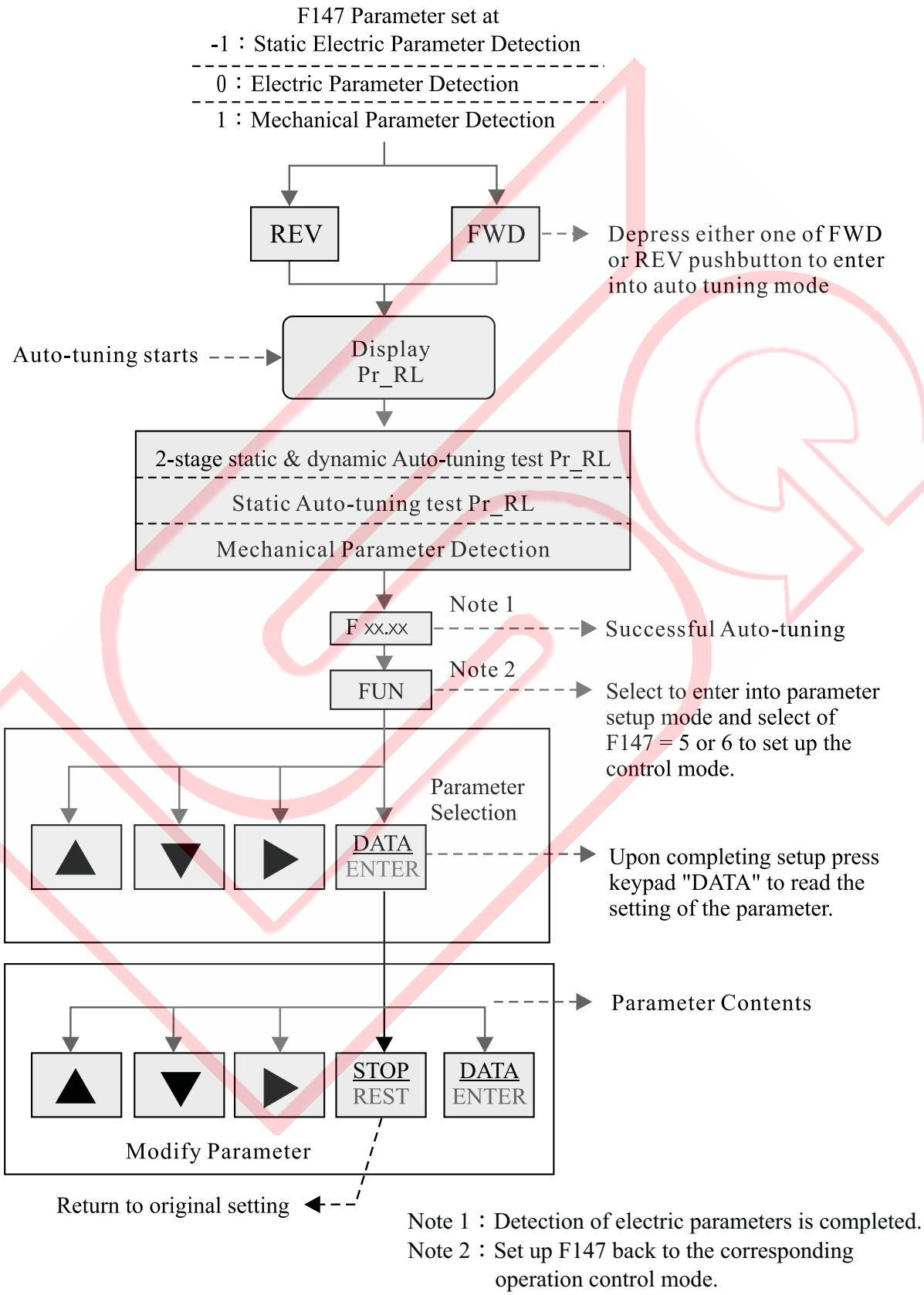

Note 1 : Detection of electric parameters is completed.
Note 2 : Set up F147 back to the corresponding operation control mode.

Basic Parameter Setup

Note1: N = Setup varies depending on the ac drive and motor capacity.

Parameter Code	Description	Setup Range	Unit	Ex-factory Setting	Page No.
F4	Operation control source	0～1		0	P5-3
	0：Digital Operation panel　1： Digital input terminal				
F5	Frequency command source	0～8		1	P5-3
	0：Digital Operation panel (F17)　3：AV2 Input (+10V)　6： Pulse Frequency Command 1：Operation panel AV Input (V.R)　4：AI Input (20mA or +10V)　7： External PID 2：AV1 Input (±10V)　5：AV2+AI　8： External PID or AV2				
F6	Activation Mode	0～2		0	P5-5
	0： Started by activation frequency　1： Flying Re-start activation　2： DC brake before starting by activation frequency				
F7	Stop Mode	0～2		1	P5-6
	0： Coast to Stop　1： Dynamic stop　2：DC brake				
F13	Rotation Direction Control	0～3		1	P5-7
	0：Either FWD or REV　1： FWD Only　2： REV only　3： REV only with negative baize				
F14	Lower limit frequency (※F14≦F15)	0.0～400.0	Hz	0.0	P5-8
F15	Upper limit frequency(※F14≦F15)	0.0～400.0	Hz	60.0	
F35	Mast speed, stage4, stage8, stage12, acceleration time 0	0.0～30000	sec	10.0	P5-10
F36	Mast speed, stage4, stage8, stage12, deceleration time 0	0.0～30000	sec	10.0	
F68	Di1、Di2 Setup	0～1		0	P5-18
	0：Di1(FWD/STOP)，Di2(REV/STOP)　1：Di1(RUN/STOP)，Di2(FWD/REV)				
F92	Stall protection setup	0～31		3	P5-23
	bit4：Automatic Voltage Regulation (AVR)　bit 3：Inhibit inertia at motor start　bit2：Protection function F96 bit1：Protection function F94　bit 0： Protection function F93				
F93	Stalling Voltage Setup for Deceleration	1.00～1.25		1.20	P5-27
F94	Stalling Current Setup for Acceleration	0.50～2.50	Pu	1.50	
F95	Start Thermal relays the current setting of position	0.80～1.30	Pu	1.00	
F96	Current level for electronic thermal relay	1.00～2.50	Pu	1.50	
F97	Acting time for electronic thermal relay	0.1～120.0	sec	60.0	
F98	V/F output current limit	0.20～1.45		1.30	P5-28
F99	Leaking current,3-phase current, and abnormal level setup	0.001～0.500	Pu	0.250	
F102	Brake discharging level	1.12～1.40		1.20	P5-29
F128	PWM switch frequency	1000～16000	Hz	5000	P5-34
F129	RST Input Voltage(rms)	150～500	V	N (Note 1)	
	(※F129 setting must satisfy ：F129 ≦ 1.5 × F141)				
F141	Motor Nameplate Information: Rated voltage (rms)	150～500	V	N (Note 1)	P5-37
F142	Rated current(rms)	1.0～1000.0	A	N (Note 1)	
F143	Rated frequency	10.0～150.0	Hz	N (Note 1)	
F144	Rated speed	0～9000	rpm	N (Note 1)	P5-38
F145	HP	0.5～600.0	Hp	N (Note 1)	
F146	No. of Pole	2～32	Pole	N (Note 1)	
F147	Control mode setup	-1～6		2	
	−1：Static Electric Parameter Detection　3：Closed Loop Scalar Control（V/F + Feedback） 0：Electric Parameter Detection　4：Sensorless Scalar Control（V/F Sensorless Vector Control） 1：Mechanical Parameter Detection　5：Close Loop Vector Control（Flux Vector＋Feedback） 2：Open Loop Scalar Control（V/F）　6：Sensorless Vector Control（Sensorless Flux/Vector Contor）				
F148	Speed feedback	0～1	1	0	P5-40
	0：No feedback　1： Encoder (PG)				
F149	Encoder (PG)Pulse	600～2500	P/rev	1024	P5-40
F150	Encoder (PG) Direction	-1～1		1	
	-1：B leads A　0：single phase feed back　1：A leads B				

Quick operation parameters setup block diagram

Fast operation control mode

◎ There are several operation control methods applicable to the ac drive for thereof startup operator. You can use the following operation methods to simply and quickly start the ac drive.

◎ There are two primary operation control parameters to start the operation of ac drive: The first one is F4: Operation Control Source and the other one is F5: Frequency command source. Please see the table below for description of operation.

Parameter functions	Description of operating procedures	Ex-factory setting	Page No.
F4：Operation control source			
0：Digital operation panel	Press FWD key after the display of F xx.xx ↓ Enter into the FWD operation mode	0	P5-3
	✳Please pay attention to the forward & backward rotating direction of motor when performing the test run.✳		
1：Digital input terminal	Terminal Di1 /ON → FWD (Indicator ON) operation →OFF/Stop.		P5-3 P5-19
F5：Frequency command source			
0：Digital operation panel	Frequency changing mode is accessible by pressing the ▲ key during the operating state.	1	P5-3
1：Operation panel AV input（V.R）	To perform the rpm control from the Variable Resistor (V.R) from the operation panel.		P5-4
2：AV1 input（±10V）	To perform the rpm control by inputting 0~+10V to analogy AV1 terminal.		
3：AV2 input (+10V)	To perform the rpm control by inputting 0~+10V to analogy AV2 terminal.		
4：AI input (20mA）	To perform the rpm control by inputting 4~20mA to analogy AI terminal.		
5：AV2+AI	With analogy AV2 and AI terminals, addition and subtraction operation can be provided for both analogy signals at the same time to perform rpm control.		
6：Pulse Frequency Command	Additional mounting of PG-AB2 is required that relays the pulse signals to A1, B1 terminals for rpm control.		P5-5
7：External PID	To execute the external analog signals for PID feedback control.		
8：External PID or AV2	General control mode is to take the analog signalAV2 as the speed command source, and PID control mode will be automatically enabled when feedback value of PID analog signal reaches above the pressure command value.		

Five control modes for selection

- ◆ LS800 provides five control modes – 2: Open-loop scalar control (V/F), 3: Close-loop scalar control (V/F + PG), 4: Sensor-less scalar control (V/F sensor-less vector control), 5: Close-loop vector control (Flux vector + PG), 6: Sensor-less vector control (Sensor-less flux vector control). The user can base on his own application requirements and use the digital operation panel to select the control mode.
- ◆ The AC drive has been set to V/F control mode at ex-factory; please set up the control modes and relevant parameters according to the following flow processes.

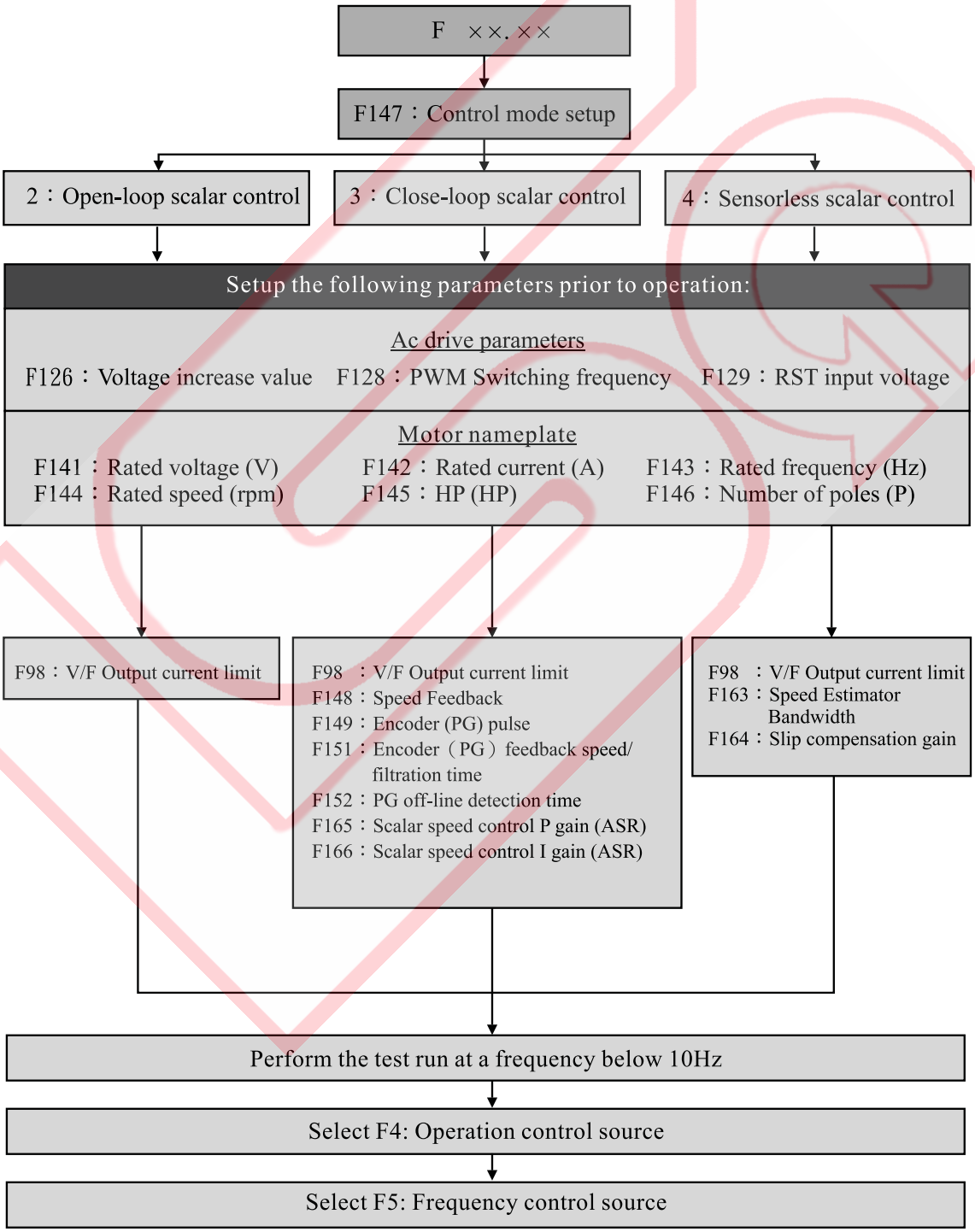

F147：Control mode setup

5：Close-loop vector control

6：Sensorless vector control

Setup the following parameters prior to operation:

Ac drive parameters

F128：PWM Switching frequency　F129：RST input voltage（rms）

Motor nameplate

F141：Rated voltage (V)　F142：Rated current (A)　F143：Rated frequency (Hz)
F144：Rated speed (rpm)　F145：HP (HP)　F146：Number of poles (P)

F148：Speed feedback
F149：Encoder(PG) pulse
F151：Encoder(PG) feedback speed / filtration time
F152：PG off-line detection time
F167：Low-speed Sensorless speed control P gain
F168：Low-speed Sensorless speed control I gain
F169：High-speed Sensorless speed control P gain
F170：High-speed Sensorless speed control I gain
F177：Close-loop vector control zero-speed positioning
F178：Zero-speed Positioning P gain
F179：Zero-speed Positioning I gain

F162：Magnetic Flux Estimator Bandwidth
F163：Speed Estimator bandwidth
F164：Slip compensation gain
F167：Low-speed Sensorless speed control P gain (ASR)
F168：Low-speed Sensorless speed control I gain (ASR)
F169：High-speed Sensorless speed control P gain (ASR)
F170：High-speed Sensorless speed control I gain (ASR)
F171：Low-speed magnetic-field magnification factor
F172：Magnetic-field Magnification cut-off Frequency

To perform the detection & measurement of electric parameters, F147 control mode shall be set to:
-1：Static Electric Parameter Detection　0：Electric Parameter Detection

Perform Auto tuning (Detection & measurement of electric parameters)

[F ××.××] display indicates a successful auto-tune

Set F147 Control mode to:
1：Mechanical Parameter Detection, and execute the detection & measurement of mechanical parameters

[F ××.××] display indicates a successful detection & measurement of mechanical parameters

Set F147 Control mode to:
5：Close Loop Vector Control

Set F147 Control mode to:
6：Sensor-less Vector Control

Perform the test run at a frequency below 10Hz

Select F4: Operation control source

Select F5: Frequency command source

Torque current limit, torque current command

- ◆ Torque current limit is provided only for setting the operation of two control modes: F147=5: Close-loop vector control (flux vector + PG), 6: Sensor-less vector control (sensor-less flux vector control); torque control function for other control modes is not available.
- ◆ Max. torque current = Rated current of AC drive x (F173) torque current command level x 2.
- ◆ Torque current(rms)＝(Rated current of AC drive ×(F173) torque current command level×2) / 1.414

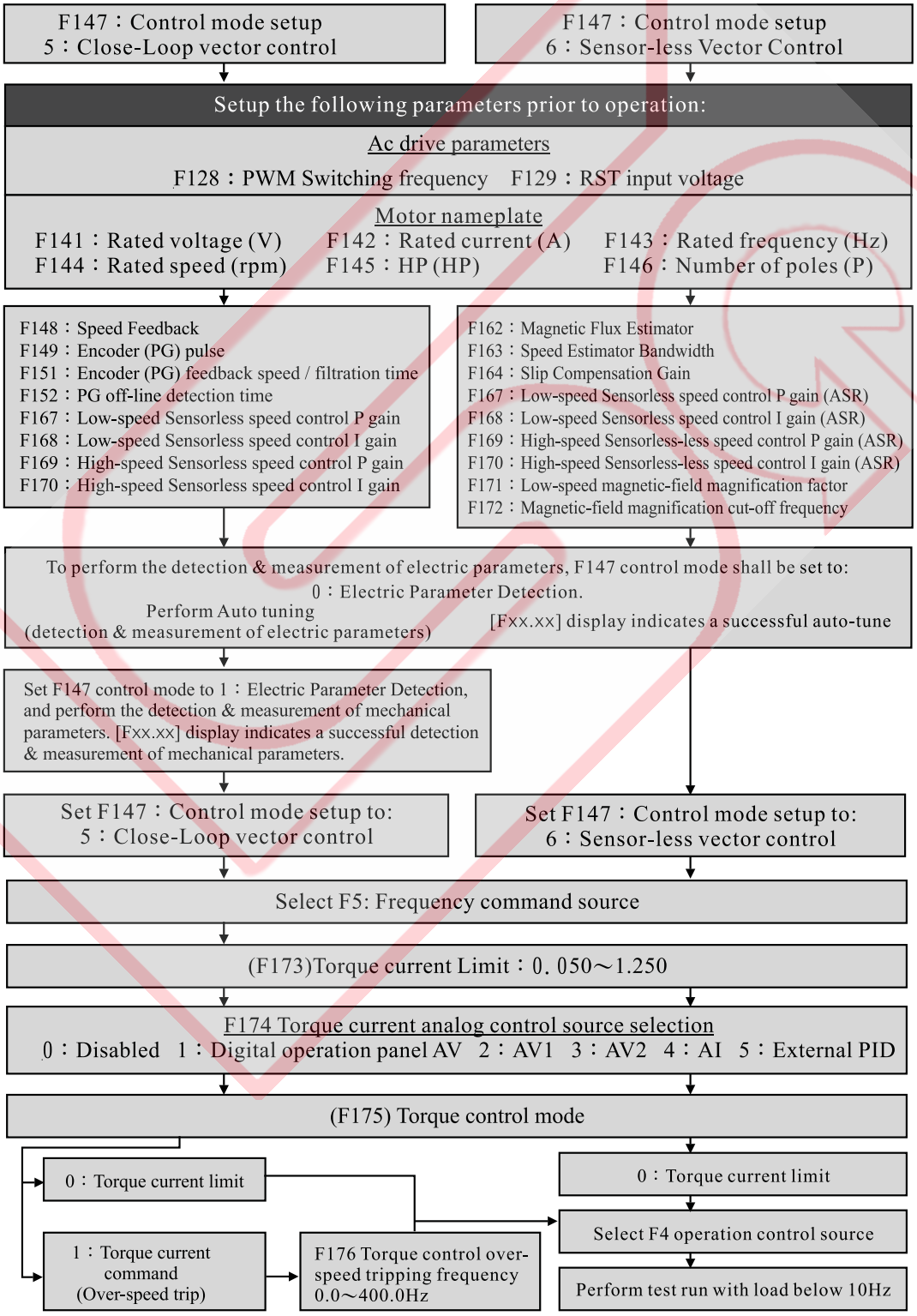

Position tracking of pulse-wave command

- ◆ Additional mounting of PG feedback card (optional) is needed for performing the position tracking of pulse-wave command; please refer to P2-19 in this regard; and the pulse-wave frequency command shall be input from A1, B1.
- ◆ Note 1: The set value to F15 for the upper limit of frequency shall be higher than the upper limit of pulse-wave frequency command to be controlled by more than 15%.
- ◆ Note 2: When set F4 operation control source= 1: Digital input (Di1, Di2) terminal, it shall be enabled prior to the signal from the pulse-wave frequency command so as to protect the pulse-wave number command from loss.
- ◆ Note 3: The speed rate of acceleration/deceleration can be the speed rate of pulse-wave frequency command or the speed rate set to F35, F36.

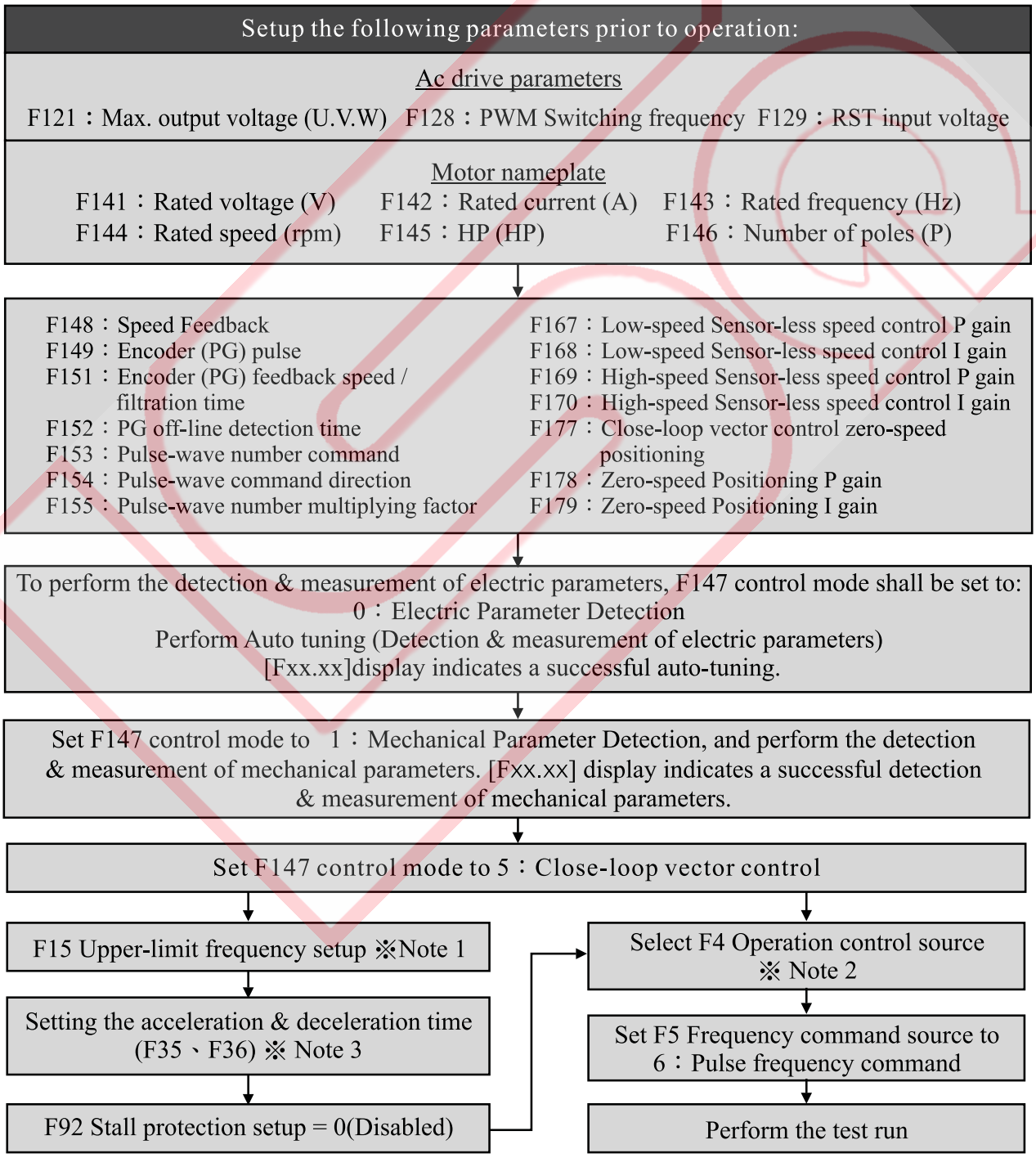

V Description of Parameter Functions

- ◆ Operator Display Setting...5-1
- ◆ Operation Control Parameters.....5-3
- ◆ Speed limit.....5-7
- ◆ Multi-stage speed Command Setup.....5-9
- ◆ Acceleration/Deceleration time.....5-10
- ◆ Analog Input.....5-12
- ◆ Digital(Di) Input.....5-18
- ◆ Input (Do)Output.....5-22
- ◆ Jumping Frequency.....5-25
- ◆ Motor Protection Setup....5-25
- ◆ Automatic Operation Function.....5-29
- ◆ Magnetic Flux Setup.....5-31
- ◆ FM1 AO waveform output..... (No.2.31 Special-Purpose).....5-34
- ◆ FM2 AO waveform output..... (No.2.31 Special-Purpose).....5-34
- ◆ AC Drive Parameter (No.2.32 Special Purpose).....5-36
- ◆ FM1 AO analogy output (No.2.32 Special-Purpose).....5-36
- ◆ FM2 AO analogy output (No.2.32 Special-Purpose).....5-37
- ◆ Motor nameplate.....5-37
- ◆ Control Mode.....5-38
- ◆ Encoder Setup.....5-40
- ◆ Motor Electric Parameters..... 5-43
- ◆ Flux Estimation Tester.....5-44
- ◆ Speed PI Controller (ASR)5-45
- ◆ Zero-speed positioning.....5-48
- ◆ Abnormality Records.....5-49
- ◆ External PID.....5-51
- ◆ Special parameter setup....5-55
- ◆ Communication Setup.....5-56
- ◆ MODBUS Communication..... 5-58
- ◆ Recalling Parameters.....5-65

Operator Display Setting

R	Parameter	Description	Range	Unit	Ex-factory Setting
◯	F0	Operator display selections	0～40		1

※ Seven digits display and LED indicators on the operator panel may be applied to monitor a total of 37 operation status or settings of the AC drive.

Setting	Function	Description of Function	Related Parameter
0	frequency Command (F)	Display the command setting	F5
1	Ouput frequency (H)	Display the output motor speed value.	-
2	Output Current (A)	Display the drive motor load current from output of AC drive (U.V.W)	-
3	Output Voltage (E)	Display the output (U.V.W) voltage (rms) of the ac drive.	
4	PG Feedback Speed rpm (n)	Display the actual speed of the motor feedback to Encoder.	F148、F149
5	Pulse Frequency Command	Displayed pulse frequency command × F155 multiplying power.	F153、F155
6	Vector Estimated RPM	Display the calculated sensorless vector control output speed.	F147=6
7	Output Power Supply Frequency	Display the compensated output frequency of the closed loop scalar or vector control	F147=3,4,5,6
8	Unitless	Display the linear speed, feeding speed of the process (with maximum display value at 3276.7).	F3
9	Slipping Frequency	Display the slip Frequency due to load when the motor is on load.	F147=3,4,5,6
10	Vdc(V)	Display DC voltage on the DC bus capacitor	–
11	Excitation Voltage	Display the excitation voltage in vector control mode.	
12	Torque Voltage	Display the torque voltage in vector control mode	
13	Excitation Current Command	Display the command value of excitation current in vector control mode	
14	Torque Current Command	Display the command value of torque current in vector control mode	
15	Excitation Current	Display the actual excitation current	
16	Torque Current	Display the actual torque current	
17	Output Power	Display the total output apparent power P=IV	
18	True Power (rms)	Display the total true power P=VI cosψ	
19	Virtual Power %	Display the total reactive power P=VI sinψ	

Description of power display:
Example: Motor with the following specifications:

Number of Poles	HP	Voltage (rms)	Current (rms)	Frequency	Speed (rpm)
4	5 Hp	220/380(V)	14/8.1(A)	60Hz	1700

Input the rated apparent power : $S_N = \sqrt{3} \times 220 \times 14 = \sqrt{3} \times 380 \times 8.1 = 5334.7$

Rated output shaft power : $P_{out,N} = 5 \times 746 = 3730W = T_N \times \omega_N$

Rated speed : $\omega_N = 1700 \times (2 \cdot \pi / 60) = 178.023\,(rad/s)$

Rated torque: $T_N = P_{out} / \omega_N = 20.95\,(N-m)$

Input true power = (Stator wire loss + core loss + rotor wire loss + bearing rotation loss) + rotating shaft's output mechanical power $P_{in} = \sqrt{3} \times V_{LL} \times I_{\Phi} \times \cos\theta_{VI} = P_{out} + P_{loss}$

Input virtual power $Q_{in} = \sqrt{3} \times V_{LL} \times I_{\Phi} \times \sin\theta_{VI}$

Input apparent power $S_{in} = \sqrt{3} \times V_{LL} \times I_{\Phi} = \sqrt{P_{in}^2 + Q_{in}^2}$

Where, V_{LL} is the rms of line voltage; I_{Φ} is the rms of phase-current or line-current; θ_{VI} is the power factor angle. If the motor at present has $V_{LL} = 120\ volt$, $I_{\Phi} = 10\ A$, $\theta_{VI} = 60^o$, then

$$P_{in} = \sqrt{3} \times 120 \times 10 \times \cos 60^o = 1039.2$$

$$Q_{in} = \sqrt{3} \times 120 \times 10 \times \sin 60^o = 1800$$

$$S_{in} = \sqrt{3} \times 120 \times 10 = \sqrt{1039.2^2 + 1800^2} = 2078.5$$

And the display of ac drive is to take S_N as 100.00%; therefore, the indicating values shall be as follows respectively:

$$P_{in}(\%) = \frac{1039.2}{5334.7} \times 100.00 = 19.48\%$$

$$Q_{in}(\%) = \frac{1800}{5334.7} \times 100.00 = 33.74\%$$

$$S_{in}(\%) = \frac{2078.5}{5334.7} \times 100.00 = 38.96\%$$

Setting	Function	Description of Function	Related Parameter
20	Temperature (℃)	Display the temperature of internal heat sink.	F100、101
21	Count value	Built in a simple counter unit to display the count number.	F84、F85
22	Digital input status	Able to monitor and access a real-time ON/OFF status display from digital input terminals and digital output terminals (Please see P3-5 for status monitoring).	F68～F74
23	Digital output status		F75～F79
24	Digital operation panel AV(%)	・Able to display the percentage of analog input voltage %. ・Able to monitor the noise voltage generated from the wiring and use this voltage to set up the bias voltage to avoid unnecessary noise interference.	F5=1
25	AV1(V)		F5=2
26	AV2(V)		F5=3
27	AI(mA)		F5=4
28	Vdc_0	The initial DC voltage of DC bus on capacitor when POWER is ON.	-
29	Cycles & Multiple Stages	Able to display the stroke by number of cycle and number of speed stage established by the auto-operation mode. ・No. of cycle and speed stage is displayed in decimal system (0~9). ・Display will be：(No. of cycle) × × × . × × (No. of speed stage)	F103～F120
30	K_Vdc		
31	Phase U current (rms)	Display the drive motor load amperage of Phase U output of the AC drive.	
32	Phase V current (rms)	Display the drive motor load amperage of Phase V output of the AC drive.	
33	Phase W current (rms)	Display the drive motor load amperage of Phase W output of the AC drive.	
34	PID (%)	Display the PID control output in %.	F186
35	Reserved	Reserved	
36	Software version	To display the version number of software.	
37	Position-tracking error	Display the position and track the error value.	F177 = 2

R	Parameter	Description	Range	Unit	Ex-factory Setting
◯	F1	LPF filtration time display	0～15		6

◎ Able to filter out the fluctuation of low-bit display value in order to read the numerical value of indicated status.
◎ Do not set up a long time constant, otherwise it will affect the response speed against the display of numerical value.

◯	F2	Speed display unit	0～1		0

◎ Frequency (Hz) or speed (rpm) can be displayed for the output operation speed of the ac drive to be set by this parameter while displaying any function selected for the status displayed by F0 operation panel

■ **0 : Frequency(Hz)**

■ **1 : Revolution per minute(rpm)**

◯	F3	Unitless display of fold of multiplication	0.001～10.000		1.000

◎ This function may be applied to set up a multiplying power to display linear speed, feeding speed or the output of the final mechanical real rpm after reduction ratio.
◎ Unit-less display value = output rpm × F3 multiplying power.
(Max multiplying display value = 3276.7).

Operation control Parameter

×	F4	Operation Control Source	0～1		0

Before operating the AC drive, operation control command must first be given. User may select the operation control input as Digital Operation Panel or Digital Input Terminal.

■ **0 : Digital operation panel** — AC driver to start, forward direction, reverse direction and stop operation of the ac drive are all controlled by the Digital operation panel.

■ **1 : Digital Input Terminal** — AC driver to start, forward direction reverse direction, and stop operation of the ac drive are all controlled by the digital input terminals.

◯	F5	Frequency Command Source	0～8		1

※ This parameter relates to the Frequency command of the ac drive. The following nine options of Frequency commands are available for selection, depending on required configuration of the control system.
※ Once the inching command function setup becomes effective, it has the highest control priority is over the other nine speed commands and permits adaptation of any other type of speed command for alternative control.

■ 0：Digital operation panel (F17) — Control is set up by keypad [Increase] and [Decrease] from the Digital Operation panel, or by functions 12: Master Speed Increase, and 13: Master Speed Decrease Control of the multi-function programmable digital input terminals.

■ **1 : Operation panel AV Input (V.R)** — Control by potentiometer (V.R) signals DC0~5V from the operation panel.

■ **2 : AV1 Input (±10V))** — Control by analog voltage signal DC0~±10V from analog input terminal AV1.

■ **3 : AV2 Input (+10V)** — Control by analog voltage signal DC0~+10V from analog input terminal AV2.

■ **4 : AI Input (20mA)** — Control by analog current signal DC4~20mA (or DC0~+10V to be selected from SW1~5) from analog input terminal AI.

■ **5 : AV2+AI** — Control by addition of two input values of the analog voltage and analog current (or voltage) signals from both analog input terminals AV2 and AI; or addition and subtraction control being done by an ideal negative bias set up by the parameter while performing synchronous linking analog compensation control for multiple units.

※ For example: (1) Parameter F15 = 60Hz(Upper Limit Frequency), AV2 of F58 = 10V(Gain Ratio 100%), F57 = 0V(bias Ratio 0%). (see Fig.1 for the curve of Hz vs.V).

※ For example: (2) AI of F63 = 10V(Gain Ratio 50%), F62 = 0V(bias Ratio -50%), (See Fig. 2 for the curve of Hz vs. mA (or V).

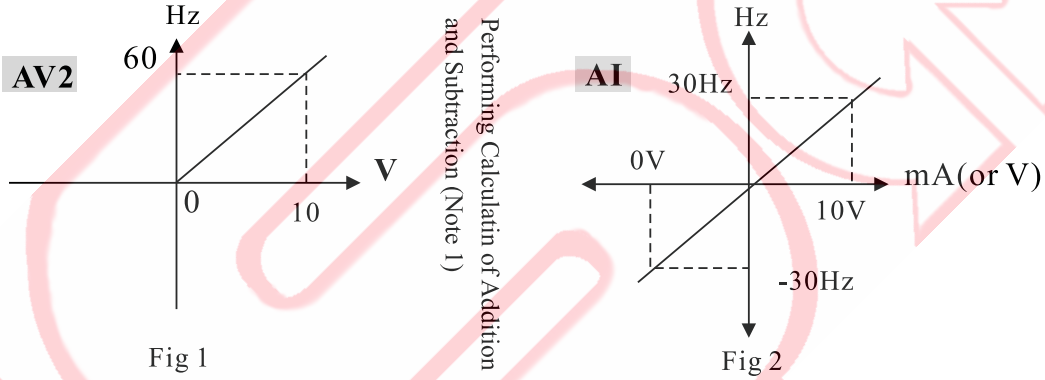

Note 1: Figs. 1 and 2 are schematic view showing the executed addition and subtraction calculation signals.

※ For example 3: AV2 of INV2 is the master speed input to exercise addition/ subtraction operation on AI signals with AI as compensating input. The sum of both values is not be greater than the upper limit of F15 frequency and if the difference between both is less than 0Hz, the ac drive stops. Refer to the setup method illustrated in Figs. 1 and 2 for the setting of the parameter.

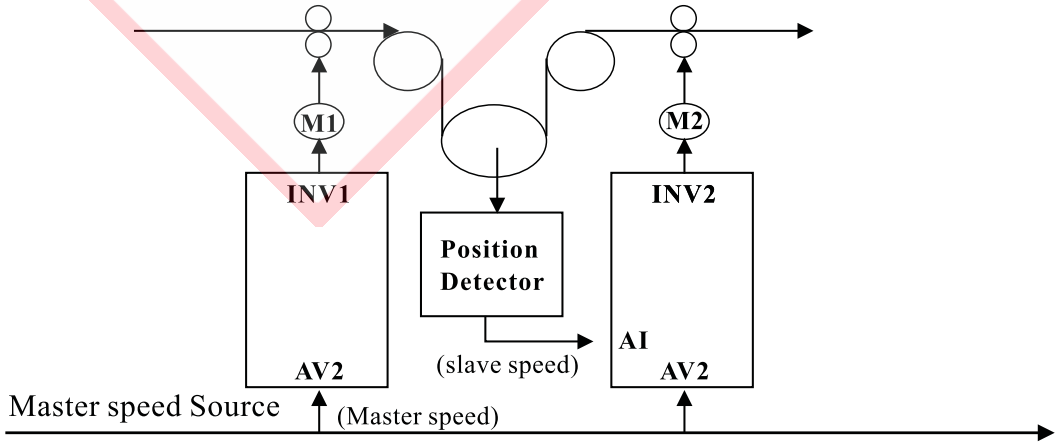

Fig 3

■ **6 : Pulse frequency Command** — Relates to the control interface for the speed command of the pulse signal type. An additional encoder speed feedback card must be installed to provide follow-up operation control with the master ac drive (synchronous operation control by ratio).

※ **Note : The set value of F15: Upper Limit Frequency must be higher than the upper limit of needed pulse frequency command by more than 15%.**

(Refer to encoder setup parameter group F148~F155 for related application.)

■ **7 : External PID** — To perform external analog signals for PID feedback control. [Select parameter setup PID set point value and PID feedback value for its input control terminals, and PID parameter group F186~F200]

■ **8 : AV2 + External PID** — General control mode is to take the analog signalAV2 as the speed command source, and PID control mode will be automatically enabled when feedback value of PID analog signal reaches above the pressure command value. (Conditions of control mode are described below)

(1) Unless otherwise the pressure mode at minimum pressure is enabled at PID command value ＜ Parameter F201, and AV2 < 0.5 %, it is under general control mode.

(2) Under the general control mode：

(A) If PID command value ＜ Parameter F201, and AV2 ≧ 0.5 %, then it is in general control mode.

(B) When PID command value ≧ Parameter F201：

(a) Under general control mode：

If PID feedback value < PID command value, then it stays at general control mode.

If PID feedback value ≧PID command value, then it enters into PID control mode.

(b) Under PID control mode：

If PID command value ≧ Parameter F201, then it stays at PID control mode.

If PID command value ＜Parameter F201, then it ends the PID control mode.

R	Parameter	Description	Range	Unit	Ex-factory Setting
×	F6	Strat Mode	0～2		0

■ **0 : Started by Activation Frequency** — The AC drive input frequency of the ac drive. (Refer to F16).

■ **1 : Flying Re-start activation** — The motor frequency is first detected from the running motor by the AC drive, and the detected frequency point is entered for the speed operation (Catch the flying motor speed). so as to reduce the severe impact from the regenerated current of the motor upon starting.

■ **2 : DC brake before Starting by Activation Frequency** — The AC drive upon receiving the start command signal, will first perform the DC brake to make sure that the motor is stopped properly before start-up by activation frequency. Refer to F8 and F9 for the parameter setup of the DC brake before activation。

Caution : To use the function of flying re-start, select 3: Closed Loop V/F vector Control in F147 control mode. To do this, a PG device for Phases A and B signals must be made available to precisely detect the running frequency and revolving direction, this operation is preferred for a load with greater inertia. When selected open loop V/F vector control and sensorless V/F vector control, the error of the estimated idling frequency is greater when the electric signals transmitted by the idling motor are used to estimate the idling frequency and direction; meanwhile, impacts from regenerated current inputted to operation is greater, thus is more preferred for the load with smaller inertia.

INHIBIT

Use of this function of flying re-start is not allowed for Closed Loop Flux Vector Control and Sensorless Flux Vector Control in F147 control mode.

R	Parameter	Description	Range	Unit	Ex-factory Setting
×	F7	Stop Mode	0～2		1

◎ To select the stop mode of the ac drive as required by the machine after the input of the proper stop signal.

■ **0 : Coast to Stop** — With the stop signal, the ac drive immediately turns off its drive signal for the power circuit between the ac drive and the motor to become OFF. Accordingly, the motor coasts to stop due to the system friction.

■ **1 : Dynamic Stop** — the motor reduces its speed and stops according to the rate of the deceleration time.

■ **2 : Dynamic DC Brake** — DC brake is enabled when the output frequency reduces according to the deceleration rate to stopping. This enables the motor to stop soonest. Refer to those related parameters of F10~F12.

×	F8	Brake Time before Activation	0.0～120.0	Sec	5.0

◎ With this parameter set to activate the ac drive upon the expiry of the duration of the enabled DC brake. If the time is set at its minimum value, i.e., "0", it is deemed as a cancellation of the function of brake before activation.

×	F9	Current of brake before activation	0.00～1.00	Pu	0.20

◎ This parameter is to set up the magnifying factor of output dc brake current prior to the operation of ac drive. A minimum set value of brake current "0" will leave the output of brake energy ineffective, and will be regarded as a control to trigger a time-delay for operation. The set value of F8 shall govern the length of time delay.

Note：The brake current 100% is to take the set value to the F142 motor-rated current as the standard.

R : Parameter is changeable during operation (◯)

R	Parameter	Description	Range	Unit	Ex-factory Setting
×	F10	Stop brake time	0.0～120.0	Sec	5.0
×	F11	Stop brake current	0.00～1.00	Pu	0.20
×	F12	(V/F) Stop Brake Beginning Frequency	0.0～60.0	Hz	0.0

◎ This parameter group sets the frequency to begin the DC brake, brake current and brake time when the motor stops, thus to provide load holding after the motor stops. Do not set Stop Brake Time and Stop Brake current at the minimum, i.e., "0" since there is no time or brake energy is available for operation.

◆ This parameter is to establish the function of frequency for initiating the dynamic dc brake to stop; the following setup shall be made first: F7 Stop mode=2: Dynamic DC Brake, F10:Stop Brake time and F11: Stop Brake current.

◆ F12 function is F147 = Open Loop scalar Control, 3：Close Loop scalar Control or 4：Sensorless scalar control.

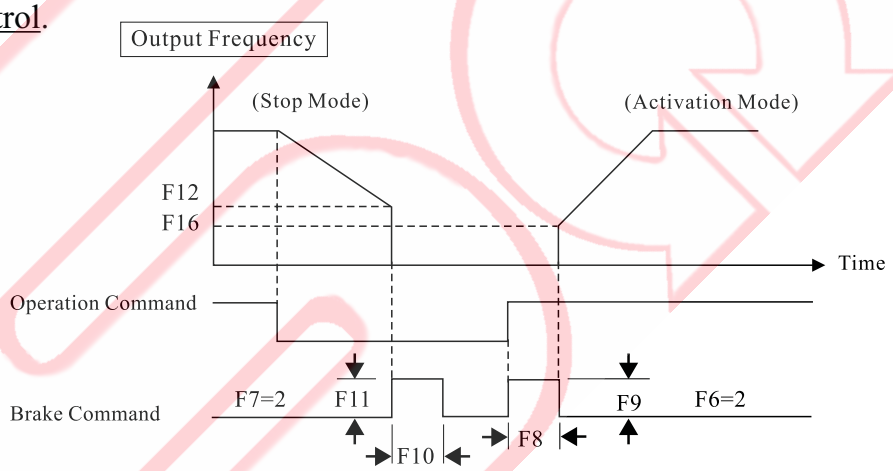

Speed Limit

×	F13	Rotating Direction Control	0～3		1

◎ If for safety concerns for the operation of the machine that the motor can only be set for forward or reverse direction, apply this set of functions to select the restricted rotating direction for the motor.

■ **0 : Either FWD or REV**

■ **1 : FWD only**

■ **2 : REV only**

■ **3 : REV only with negative bias**

◎ If 3: REV only with negative bias is selected, there are five types of analog input signal in the parameter F5: Speed Command that provide the settings of the negative bias frequency. When the analog input signal setting works within the negative bias frequency region, the motor runs in reverse direction; in positive frequency region, in forward direction. [For details of analog signal bias setup, refer to each analog signal bias parameter group (F50, F52, F57, and F62)].

◎ Select 3: REV only with negative bias, F5 = 5 : AV2 + AI to control the operation of addition& subtraction, and F5 = 7 : PID(%) to perform the negative PID % control.

WARNING

The rotating direction set for the AC drive is not necessarily the same as that of the motor. The polarity of motor differs on the each make. Attention must be made to the danger caused by reverse motor rotation.

R	Parameter	Description	Range	Unit	Ex-factory Setting
×	F14	Lower Limit Frequency	0.0～400.0	Hz	0.0
×	F15	Upper Limit Frequency	0.0～400.0	Hz	60.0

※ Proper upper and lower frequency limit settings could help protect the mechanical system. Any wrong speed command given by the operator shall not cause damage to the system due to machine idling or operation in dangerously high speed.

※ Set value of Upper /Lower Limit Frequency must satisfy the condition: F15≧F14.

×	F16	Activation Frequency	0.0～30.0	Hz	0.0

◎ The function of lower limit frequency is disabled once it is smaller than the activation frequency.

◎ If the speed command setting is greater than that of F16 activation frequency the latter is inputted into operation up to the former. The system is in ready status if the speed command setting is smaller than that of the activation frequency.

◎ When the F14 lower limit frequency setting is greater than that of the F16 activation frequency and the speed command setting A is greater than F16 activation frequency setting (the speed command A as illustrated), the activation frequency value is inputted into operation until it reaches the lower frequency setting (Section a as illustrated). If the speed command setting is greater than the lower limit setting (i.e., the speed command B as illustrated), then the operation continues to reach the speed command setting (i.e., Section b as illustrated).

◎ When the speed command setting is higher than the upper limit frequency (i.e., the speed command C), the output frequency will be limited to operate at the upper limit frequency setting (i.e., Section C as illustrated).

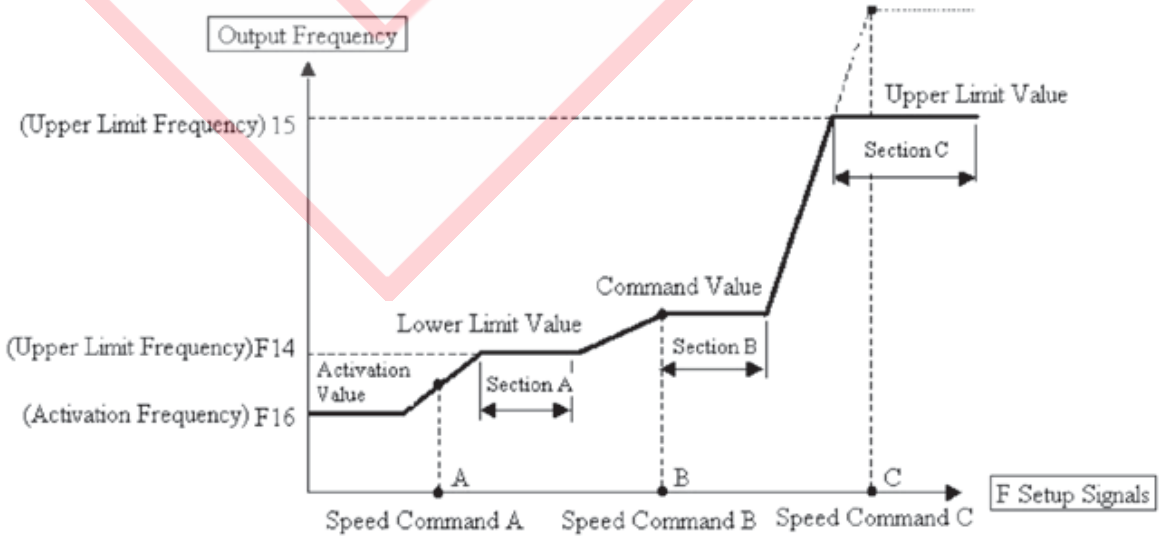

Multi-Stage Speed Command Setup

Terminal Command →			Multi-stage Command 4	Multi-stage Command 3	Multi-stage Command 2	Multi-stage Command 1	Setup Range	Unit	Ex-factory Setting
◯	F17	Master Speed	OFF	OFF	OFF	OFF	0.0～400.0Hz	Hz	5.0
◯	F18	Stage 1 speed	OFF	OFF	OFF	ON	0.0～400.0Hz	Hz	5.0
◯	F19	Stage 2 speed	OFF	OFF	ON	OFF	0.0～400.0Hz	Hz	10.0
◯	F20	Stage 3 speed	OFF	OFF	ON	ON	0.0～400.0Hz	Hz	15.0
◯	F21	Stage 4 speed	OFF	ON	OFF	OFF	0.0～400.0Hz	Hz	20.0
◯	F22	Stage 5 speed	OFF	ON	OFF	ON	0.0～400.0Hz	Hz	30.0
◯	F23	Stage 6 speed	OFF	ON	ON	OFF	0.0～400.0Hz	Hz	40.0
◯	F24	Stage 7 speed	OFF	ON	ON	ON	0.0～400.0Hz	Hz	50.0
◯	F25	Stage 8 speed	ON	OFF	OFF	OFF	0.0～400.0Hz	Hz	0.0
◯	F26	Stage 9 speed	ON	OFF	OFF	ON	0.0～400.0Hz	Hz	0.0
◯	F27	Stage 10 speed	ON	OFF	ON	OFF	0.0～400.0Hz	Hz	0.0
◯	F28	Stage 11 speed	ON	OFF	ON	ON	0.0～400.0Hz	Hz	0.0
◯	F29	Stage 12 speed	ON	ON	OFF	OFF	0.0～400.0Hz	Hz	0.0
◯	F30	Stage 13 speed	ON	ON	OFF	ON	0.0～400.0Hz	Hz	0.0
◯	F31	Stage 14 speed	ON	ON	ON	OFF	0.0～400.0Hz	Hz	0.0
◯	F32	Stage 15 speed	ON	ON	ON	ON	0.0～400.0Hz	Hz	0.0

◎ ON and OFF indicate those commands of closed and open circuit given by external terminals.

◎ In the multi-stage operation mode, stage speed operation may be selected (up to 16 stage speeds) in the form of binary 4bit and must be done through those multi-function input terminals (F69～F74).(please see the table above)

◎ Parameters F103～F120 may be selected for the programmable automatic operation to execute those sixteen stages of preset frequency. Control is done by multi-function input terminals 14: Automatic Operation and 15: Automatic Operation Control suspended, and the operation display status operation F0＝29 allows display of cycle counts and the stage number of the speed executed. For related operation on time and rotation direction of the motor, refer to Parameters F105～F120.

R	Parameter	Description	Range	Unit	Ex-factory Setting
◯	F33	Inching Speed	0.0～400.0	Hz	5.0

WARNING

※ ATTENTION - The inching operation has the top priority over any speed from the master through Stage 15 speed, it is impossible to select any other speed for operation whenever the inching operation is executed. The inching operation relates to a one and only command that is put on top priority to execute under any source of operation command.

Acceleration/Deceleration Time

R	Parameter	Description	Range	Unit	Ex-factory Setting
×	F34	Acceleration/deceleration time unit	0～2		1

■ **0 : 0.01 Second** — The acceleration/deceleration time of F35～F44 shall be 0.00～300.00 seconds.(Ex-factory set value: 10.00 seconds)

■ **1 : 0.1 Second** — The acceleration/deceleration time of F35～F44 shall be 0.0～3000.0 seconds.(Ex-factory set value: 10.0 seconds)

■ **2 : 1 Second** — The acceleration/deceleration time of F35～F44 shall be 0～30000 seconds.(Ex-factory set value:100 seconds)

◯	F35	Master Speed,Stage 4,Stage 8,Stage 12, Acceleration time 0	0.0～30000	Sec	10.0
◯	F36	Master Speed,Stage 4,Stage 8,Stage 12, Deceleration time 0	0.0～30000	Sec	10.0
◯	F37	Stage 1,Stage 5,Stage 9,Stage 13 , Acceleration time 1	0.0～30000	Sec	10.0
◯	F38	Stage 1,Stage 5,Stage 9,Stage 13 , Deceleration time 1	0.0～30000	Sec	10.0
◯	F39	Stage 2,Stage 6,Stage 10,Stage 14 , Acceleration time 2	0.0～30000	Sec	10.0
◯	F40	Stage 2,Stage 6,Stage 10,Stage 14 , Deceleration time 2	0.0～30000	Sec	10.0
◯	F41	Stage 3,Stage 7,Stage 11,Stage 15 , Acceleration time 3	0.0～30000	Sec	10.0
◯	F42	Stage 3,Stage 7,Stage 11,Stage 15 , Deceleration time 3	0.0～30000	Sec	10.0
◯	F43	Inching Acceleration Time	0.0～30000	Sec	5.0
◯	F44	Inching Deleceleration Time	0.0～30000	Sec	5.0

◎ The time duration set for acceleration or deceleration determines the increasing or decreasing speed of output frequency F143: rated frequency is the reference frequency for the acceleration or deceleration of time.

◎ There are four sets of independent acceleration/deceleration time settings available for the allotment of internal acceleration/deceleration time (as shown in the table given above) either by Parameter F45 or through those multi-function input terminals (F69～F74 functions 10：Acceleration/Deceleration Time 1, and 11: Acceleration/ Deceleration Time 2).

◎ Inching acceleration/deceleration time settings are only available for the operation at inching speed.

CAUTION

Shorter acceleration/deceleration time may cause danger of transient overload current or overload voltage; improper adjustment will cause the ac drive to trip, damaged or burnt out.

R : Parameter is changeable during operation (◯)

R	Parameter	Description	Range	Unit	Ex-factory Setting
×	F45	Multi-stage acceleration/ deceleration time allotment	0～2		0

◎ Four independent sets of acceleration/deceleration time are available to allow combined application through three types of internal and external allotment

■ **0 : All Internal Allotment** — Acceleration/deceleration time is assigned for the use by stages 16 preset of speed through the existing allotment mode already fixed. (Refer to F35～F44 table or Table 1 given below.)

■ **1: Half Internal Allotment and another Half External Terminals** — Master Speed, Stage 1 through Stage 3 speed , and Stage 8 through Stage 11 speed are respectively allotted internally based on the individual acceleration/deceleration time; and stage 4 speed through stage 7 speed,stage 12 speed through stage 15 speed are freely used and controlled through external multi-function input terminals to be set by binary 2bit. (Refer to Table 1 or Table 2.)

■ **2: All External Terminals** — Acceleration/deceleration time of 16 stages of speed are all controlled by multi-function input terminals to be edited by binary 2bit. (Refer to Table 2.)

(Table 1)

Multi-stage Speed / Acceleration / Deceleration Time	Master	Stage1	Stage2	Stage3	Stage4	Stage5	Stage6	Stage7
	Stage8	Stage9	Stage10	Stage11	Stage12	Stage13	Stage14	Stage15
0 : Internal Al otment	0	1	2	3	0	1	2	3
1 : Internal/External Alotment	0	1	2	3	External (Multi-function digital input) terminals			

(Table 2)

Digital Terminal / Acceleration / Deceleration Time	DIn	DIn
	2	1
Acceleration/Deceleration 0	OFF	OFF
Acceleration/Deceleration 1	OFF	ON
Acceleration/Deceleration 2	ON	OFF
Acceleration/Deceleration 3	ON	ON

×	F46	S-curve time when starting the accelerate	0.00～3.00	Sec	0.00
×	F47	S-curve time when finishing the accelerate	0.00～3.00	Sec	0.00
×	F48	S-curve time when starting the deceleration	0.00～3.00	Sec	0.00
×	F49	S-curve time when finishing the deceleration	0.00～3.00	Sec	0.00

◎ S-curve can be used to perform an impact-free operation by soft start and soft deceleration.

◎ After setting the S-curve time, the acceleration/ deceleration time will be extended as follows:
Actual acceleration time =
Selected acceleration time + (F46 + F47) / 2
Actual deceleration time =
Selected deceleration time + (F48 + F49) / 2

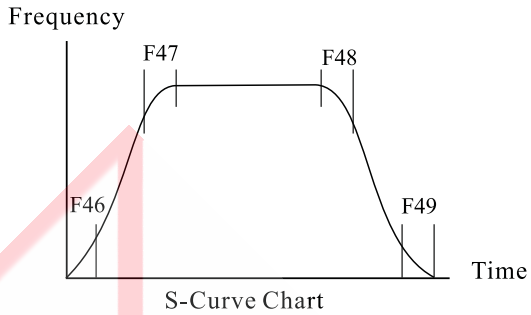

S-Curve Chart

Analog Input

R	Parameter	Description	Range	Unit	Ex-factory Setting
◯	F50	AV：0V Input bias %	-300.00～300.00	%	0.00
◯	F51	AV：5V Input Gain %	-300.00～300.00	%	100.00

◎ Parameters F50 and F51 are used to define the knob (VR)/AV analog signal command setting of the operator. The bias ratio corresponding to Parameter F50/0V may be set up a set of negative bias to avoid noise interference at 0V, or for the application by other control; Parameter F51/5V is related to gain frequency and will be subject to F15 upper limit frequency at the optimal output. (Refer to those examples of seven basic curves given below.)

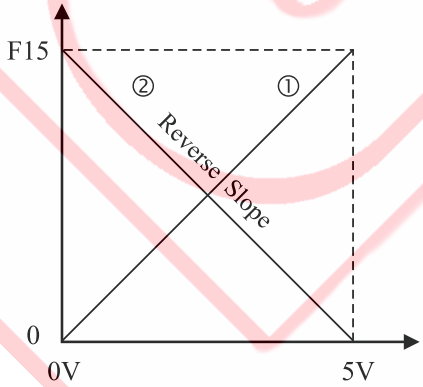

Fig 1

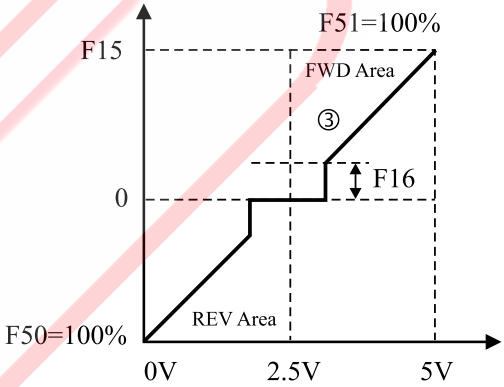

Fig 2

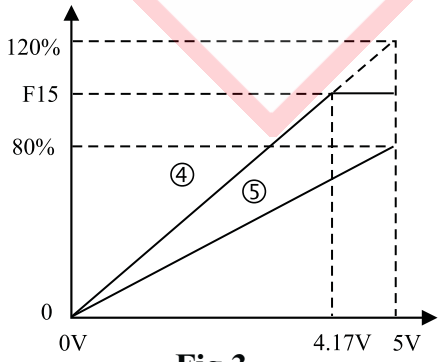

Fig 3

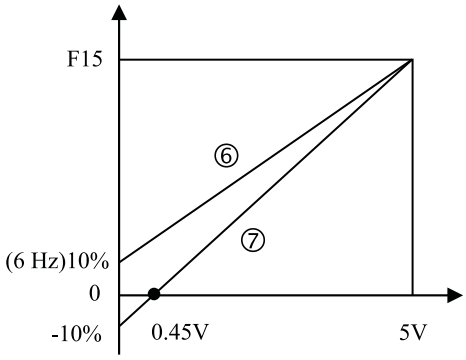

Fig 4

※ Refer to the Description Given Below According to the Chart Given Above Fig. 1, 2,3,4

	Curve①	Curve②	Curve③	Curve④	Curve⑤	Curve⑥	Curve⑦
F5 Frequency Command Source	1: AV/5V	1: AV/5V	1: AV/5V	1: AV/5V	1: AV/5V	1: AV/5V	1: AV/5V
F13 Rotation Direction Control	1: FWD only	1 : FWD only	3 : REV with negative bias	1 : FWD only	1 : FWD only	1 : FWD only	1 : FWD only
F15 Upper Limit Frequency	60HZ	60HZ	60HZ	60HZ	60HZ	60HZ	60HZ
F16 Activation Frequency	0HZ	0HZ	3HZ	0HZ	0HZ	0HZ	0HZ
F50 Operator AV:0V Bias Ratio	0.00%	100.00%	-100.00%	0.00%	0.00%	10.00%	-10.00%
F51 Operator AV:5V Gain Ratio	100.00%	0.00%	100.00%	120.00%	80.00%	100.00%	80.00%

◆ Maximum AV Operator F = (F15) upper limit frequency × (F51) Gain ratio

◆ Frequency-positive bias voltage = (F15) upper limit frequency × (F50) bias Gain ratio

Example: Curve ⑥ = 60Hz × 10% = 6Hz

◆ Negative bias voltage = 〔5V(AV ÷ (F50 bias Gain ratio + F51 Gain ratio)〕× F50 Negative bias voltage

Example: Curve ⑦ = [5V ÷ (10% + 100%)] × 10% = 0.45V **(Plus and minus symbols will not be enabled for operation)**

◆ Operator Voltage (V) $\dfrac{\text{Maximum Voltage} \times \text{Maximum Operator F}}{\text{upper limit frequency} \times \text{bias Gain ratio}}$

Example : Curve ④ $= \dfrac{5V \times 60Hz}{60Hz \times 120\%} = 4.16V$ Example : Curve ⑤ $= \dfrac{5V \times 48Hz}{60Hz \times 80\%} = 5V$

◆ Gain ratio = $\dfrac{\text{Maximum Voltage} \times \text{Maximum Operator F}}{\text{upper limit frequency} \times \text{Operator Gain ratio}}$

Example : Curve ④ $= \dfrac{5V \times 60Hz}{60Hz \times 4.16V} = 120\%$ Example : Curve ⑤ $= \dfrac{5V \times 48Hz}{60Hz \times 5V} = 80\%$

R	Parameter	Description	Range	Unit	Ex-factory Setting
◯	F52	AV1 : -10V Input bias %	-300.00～300.00	%	-100.00
◯	F53	AV1 : 10V Input Gain %	-300.00～300.00	%	100.00
◯	F54	AV1 : Dead Band Voltage (Dead Band)	0.00～85.00	%	0.00
◯	F55	AV1 : Zero-point Output Gain	0.00～50.00	%	0.00
◯	F56	AV1 : Maximal Output Limit	10.00～100.00	%	100.00

◆ Parameters F52～F56 relate to the applied parameter group for analog input terminals AV1(0～±10V) , and the Parameter F13 is set at = 3：REV with negative bias to be available for speed control and FWD/REV direction control.

- ◆ F54 set for dead band voltage allows effective prevention from noise interference when operating at 0V since such interference may cause the ac drive from precise stop of its operation resulting in the operation of the motor to swing between FWD and REV.
- ◆ Parameters F55 and F56 relate to AV1 analog input signals to allow the zero-point output and maximum output settings through A/D converter controlled parameter module output.
- ◆ Dead Band voltage =±10Vdc ∗ (F54)10% ÷ [(F53)% - (F52)%] ÷ 2
- ◆ Zero-point output frequency =(F15) upper limit frequency ∗ (F55)%
- ◆ Maximum output frequency =(F15) upper limit frequency ∗ (F56)%

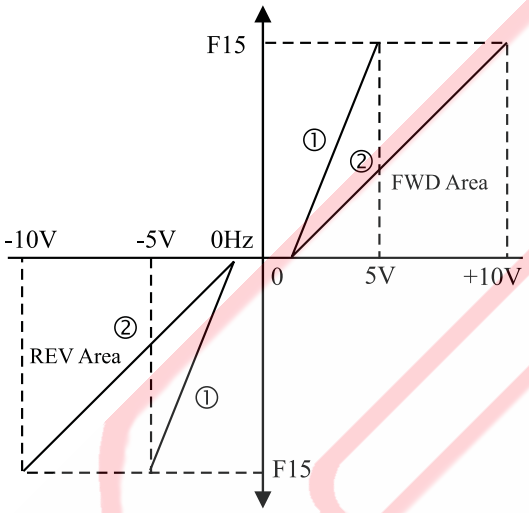

Fig 1

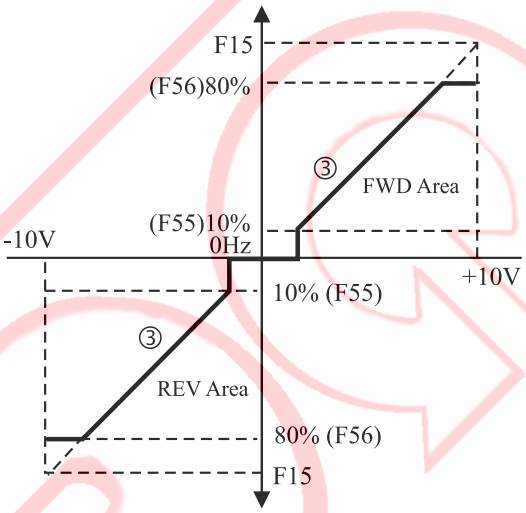

Fig 2

※ Please refer to the following tables for the description of parameters corresponding to the parameters shown inFigure 1 and Figure 2.

	Curve ① Fig.1	Curve ② Fig.1	Curve ③ Fig.2
F5 Frequency Command Source	2 : AV1/10V	2 : AV1/±10V	2 : AV1/±10V
F13 Rotating Direction Limit	3 : REV with negative bias	3 : REV with negative bias	3 : REV with negative bias
F15 Upper Limit Frequency	60Hz	60Hz	60Hz
F52 -10V:Negative Gain Ratio	-200%	-100%	-100%
F53 10V: Gain Ratio	200%	100%	100%
F54 Dead Band Voltage	10%	10%	10%
F55 Zero-point Output Gain	0.0%	0.0%	10%
F56 Maximal Output Limit	100%	100%	80%

R	Parameter	Description	Range	Unit	Ex-factory Setting
◯	F57	AV2 : 0V Input bias %	-300.00～300.00	%	0.00
◯	F58	AV2 : 10V Input Gain %	-300.00～300.00	%	100.00
◯	F59	AV2 : Dead Band Voltage (Dead Band)	0.00～85.00	%	0.00
◯	F60	AV2 : Zero-point Output Gain	0.00～50.00	%	0.00
◯	F61	AV2 : Maximal Output Limit	10.00～100.00	%	100.00
◯	F62	AI : 4mA / 0V Input bias %	-300.00～300.00	%	0.00
◯	F63	AI : 20mA / 10V Input Gain %	-300.00～300.00	%	100.00
◯	F64	AI : Dead Band Voltage (Dead Band)	0.00～85.00	%	0.00

◆ Voltage signals of Analog input terminals AV2(0～10V) and current (or voltage) signals of AI (4～20mA or 0～10V) are two individual sets of analog signal parameter groups of the same operation.

◆ Inputs of analog signal made through parameters of Input Bias Ratio (F57, F62) , Gain Raito (F58, F63) , and Dead Band Voltage (F59, F64) are sufficient to cope with different control requirements for parameter setup; and may set up the zero-point output F60 and maximum output limit F61 through parameters under the control of A/D converter. (Refer to examples of 12 types of basic curves.)

◯	F65	AI : Signal Input mode	0～1		0

■ **0 : 4～20mA** — AI input terminal, able to receive 4～20mA analog signal and enable the function for F66 parameter to detect the signal interruption.

■ **1 : 0～10V** — AI input terminal, able to receive 0～10V analog signal, but unable to enable the function for detection of signal interruption.

◯	F66	AI : Signal Interrupts detection	0～3		0

■ **0 : Not detected** — Disabled the function for detecting the AI signal interruption.

■ **1 : Slow down to zero Hz after stopping** — When interrupted the AI signal, frequency (Hz) will be reduced Progressively to 0Hz, a display of Err22 will appear.

■ **2 : Free run stopping** — When interrupted the AI signal, the frequency inverter will disconnect the output signal immediately to enable an open-circuit state between the frequency inverter and the motor; and then the motor will follow to come to stop after free run, a display of Err22 will appear.

■ **3 : Maintain the frequency of operation before break** — The frequency inverter will still stay at running state after the signal interruption for external AI detection.

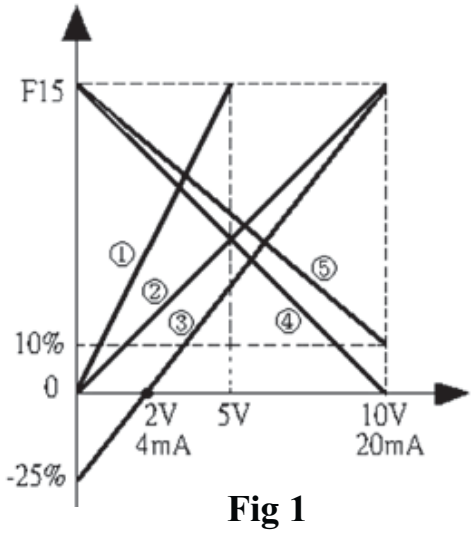

Fig 1

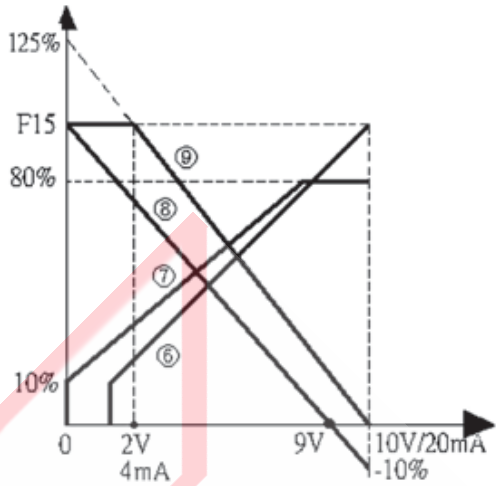

Fig 2

※ Refer to the Description Given Below According to the Chart Given Above Fig. 1

	Curve ①	Curve ②	Curve ③	Curve ④	Curve ⑤
F5 Frequency Command Source	3:AV2/10V	3:AV2/10V	3:AV2/10V	3:AV2/10V	3:AV2/10V
F15 Upper Limit Frequency	60Hz	60Hz	60Hz	60Hz	60Hz
F57、F62 0V(0mA) Bias Ratio	0.0%	0.0%	0.0%	100%	100%
F58、F63 10V(20mA) Gain Ratio	200%	100%	100%	0.0%	10%
F59、F64 Dead Band Voltage	0.0%	0.0%	0.0%	0.0%	0.0%
F60 Zero-point Output Gain	0.0%	0.0%	0.0%	0.0%	0.0%
F61 Maximum Output Limit	100%	100%	100%	100%	100%

※ Refer to the Description Given Below According to the Chart Given Above Fig. 2:

	Curve ⑥	Curve ⑦	Curve ⑧	Curve ⑨
F5 Frequency Command Source	3:AV2/10V	3:AV2/10V	3:AV2/10V	3:AV2/10V
F15 Upper Limit Frequency	60Hz	60Hz	60Hz	60Hz
F57、F62 0V(0mA) Bias Ratio	0.0%	0.0%	100%	100%
F58、F63 10V(20mA) Gain Ratio	100%	100%	-10%	0.0%
F59、F64 Dead Band Voltage	10%	0.0%	0.0%	0.0%
F60 Zero-point Output Gain	10%	10%	0.0%	0.0%
F61 Maximum Output Limit	100%	80%	100%	100%

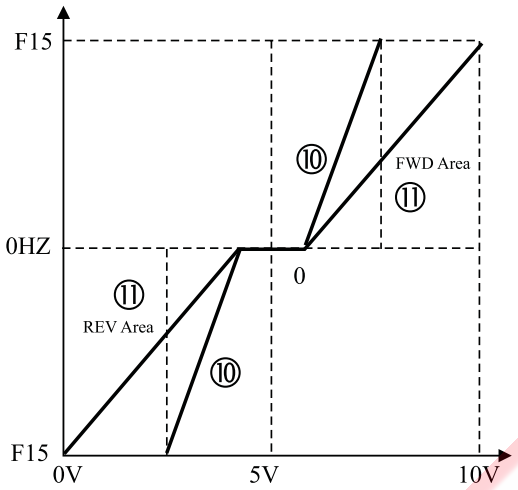

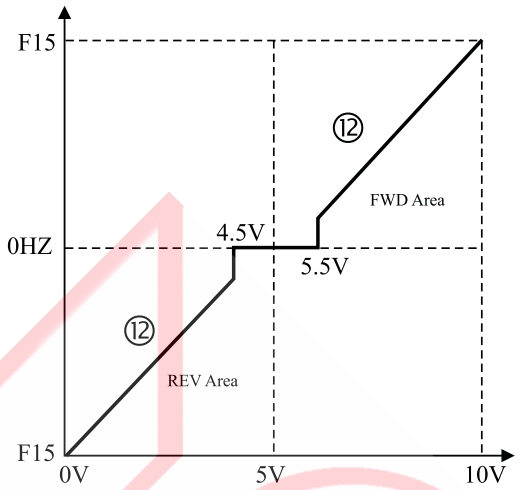

※ Refer to the Description Given Below According to the Chart Given Above：

	Curve ⑩	Curve ⑪	Curve ⑫
F5 Speed Command Source	3 : AV2/10V	3 : AV2/10V	3 : AV2/10V
F13 Rotating Direction Limit	3 : REV with negative bias	3 : REV with negative bias	3 : REV with negative bias
F15 Upper Limit Frequency	60Hz	60Hz	60Hz
F57、F62 0V(0mA) Bias Ratio	-200.0%	-100.0%	-100.0%
F58、F63 10V(20mA) Gain Ratio	200.0%	100.0%	100.0%
F59、F64 Dead Band Voltage	10.0%	10.0%	10.0%
F60 Zero-point Output Gain	0.0%	0.0%	0.0%
F61 Maximum Output Limit	100.0%	100.0%	100.0%

Digital(Di)Input

R	Parameter	Description	Range	Unit	Ex-factory Setting
×	F67	Digital Input Scan Cycle	1～5000	0.2ms	10

◎ This function filters the multi-function input terminals to prevent CUP malfunction due to noise interference or switching ejection.

◎ The scan cycle of this function will affect the response time of the multi-function input terminal. The user is advised to make proper adjusting of the setting as applicable.

◎ Scan time = setting × 0.2ms (1ms = 10^{-3}s).

×	F68	Di1, Di2 Setup	0～1		0

◎ This function sets up only terminals Di1 and Di 2, and only corresponding to 2-way operation controls and adaptation to the multi-function 1: 3-way Operation(Di3) control. All other functions do not fall with the operation scope of Di1 and Di2.

■ **0 : 2-Way Control-Di1(FWD/STOP), Di2(REV/STOP).**

F4 = 1
F13 = 0
F68 = 0

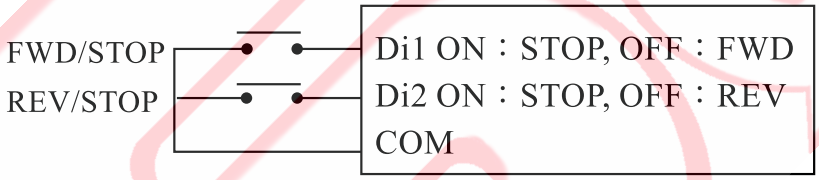

■ **1 : 2-Way Control-Di1(RUN/STOP), Di2(FWD/REV).**

F4 = 1
F13 = 0
F68 = 1

◎ F69 = **1 : 3-Way Control Operation** (Di3), (Any input terminals from Di3～Di8 may define this function in conjunction with Di1, Di2 terminals of F68.)

F4 = 1
F13 = 0
F68 = 1
F69 = 1

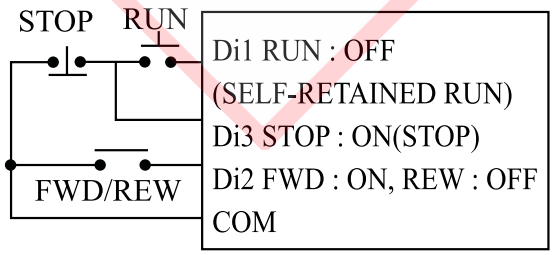

F4 = 1
F13 = 0
F68 = 0
F69 = 1

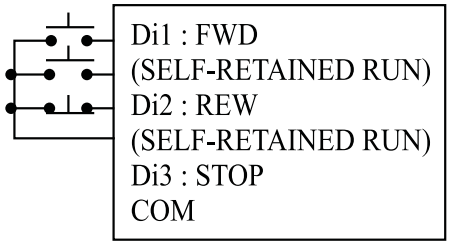

R	Parameter	Designation	Description	Range	Ex-factory Sett
×	F69	Di3 Setup	◆ Multi-function input terminals may be set up for particular use as desired. To apply such function Refer to description of function. ◆ No specific sequence is specified for the function of these six terminals; however, the setting should never be repeated with the exception of the setting of 0: Disabled.	0～24	2
×	F70	Di4 Setup		0～24	4
×	F71	Di5 Setup		0～24	5
×	F72	Di6 Setup		0～24	6
×	F73	Di7 Setup		0～24	9
×	F74	Di8 Setup		0～24	18

■ **0 : Disabled**－This function allows the function input terminal function to be in the states of being disabled, thus to prevent any malfunction for cause not identified.

■ **1 : 3-Way Control**－(Refer to 3-way control wiring diagram). RUN terminal relates to internally latched contact-a terminal; STOP terminal, contact-b terminal to release RUN from its latched status. FWD and REV may be switched between each other as desired.

■ **2 : Input in Case of External Abnormality (NO)**－Relates to Contact-a in case of external normal status; and Contact-b in case of abnormality, the AC drive trips to stop outputting.

■ **3:Input in Case of External Abnormality (NC)**－Relates to Contact-b in case of external normal status; and Contact-a in case of abnormality,the AC drive trips to stop outputting

■ **4:RESET**－When the AC drive trips due to abnormality, RESET command is used to release the abnormality status.

INHIBIT

Never operate the RESET command in a constantly closed(ON) status.

■ **5 : Multi-stage speed command 1**	Multi-stage commands 1, 2, 3 and 4 may be in the format of binary 4-bit edited into 16-stage speed for operation control. Refer to below Table.
■ **6 : Multi-stage speed command 2**	
■ **7 : Multi-stage speed command 3**	
■ **8 : Multi-stage speed command 4**	

Multi-stage command Terminal / 16-Stage Speeds	Din Multi-Stage Command 4 $2^3 = 8$	Din Multi-Stage Command 3 $2^2 = 4$	Din Multi-Stage Command 2 $2^1 = 2$	Din Multi-Stage Command 1 $2^0 = 1$
Master Speed	OFF	OFF	OFF	OFF
Stage 1 Speed	OFF	OFF	OFF	ON
Stage 2 Speed	OFF	OFF	ON	OFF
Stage 3 Speed	OFF	OFF	ON	ON
Stage 4 Speed	OFF	ON	OFF	OFF
Stage 5 Speed	OFF	ON	OFF	ON

Multi-stage command Terminal / 16-Stage Speeds	Din Multi-Stage Command 4 $2^3 = 8$	Din Multi-Stage Command 3 $2^2 = 4$	Din Multi-Stage Command 2 $2^1 = 2$	Din Multi-Stage Command 1 $2^0 = 1$
Stage 6 Speed	OFF	ON	ON	OFF
Stage 7 Speed	OFF	ON	ON	ON
Stage 8 Speed	ON	OFF	OFF	OFF
Stage 9 Speed	ON	OFF	OFF	ON
Stage 10 Speed	ON	OFF	ON	OFF
Stage 11 Speed	ON	OFF	ON	ON
Stage 12 Speed	ON	ON	OFF	OFF
Stage 13 Speed	ON	ON	OFF	ON
Stage 14 Speed	ON	ON	ON	OFF
Stage 15 Speed	ON	ON	ON	ON

■ **9 : Inching Operation** — Once executed, the inching command has priority over any other speed command; therefore, it is impossible to select any other type of speed operation while the inching operation is being executed.

■ **10: Acceleration/Deceleration Time Command 1** ■ **11: Acceleration/Deceleration Time Command 2**	Acceleration/Deceleration time of AC drive can be selected from this function and the input status of terminal, four types of acceleration / deceleration in total available for selection.

◎ If different acceleration/deceleration gradient changes are required in the process of acceleration or deceleration for any frequency; the terminal function may be applied for required control. (Refer to Below Table).

◎ Alternatively in any process of acceleration or deceleration for a frequency at any stage of speed, the terminal function may be applied to exercise various changes of gradient within four sets.

Digital Terminal / Acceleration/ Deceleration Time	2 DIn	1 DIn
	2	1
Acceleration/Deceleration Time 0	OFF	OFF
Acceleration/Deceleration Time 1	OFF	ON
Acceleration/Deceleration Time 2	ON	OFF
Acceleration/Deceleration Time 3	ON	ON

※ Note 1 : Din represents the definition given to any digital terminal input Di3～Di8.

■ **12: Master Speed Increase** —The master-speed frequency increase signal is input from the multifunctional terminal; F35 set value will be taken to perform acceleration for master-speed increase for a F35 set value≧20 seconds while 20 seconds will be taken to perform acceleration for master-speed increase for a F35 set value＜20 seconds.

■ **13 : Master Speed Decrease** — The master-speed frequency decrease signal is input from the multifunctional terminal; F36 set value will be taken to perform deceleration for master-speed decrease for a F36 set value≧20 seconds while 20 seconds will be taken to perform deceleration for master-speed increase for a F36 set value is ＜20 seconds.

◎ These two functions may be set by function terminal to provide external control over the frequency of the master speed. They permit two-way operation with the [increase (▲) and decrease(▲)] from the operator; however, the control priority for F5 Frequency Command source control must be set at 0 : Digital operation panel.

■ **14 : Automatic Operation** —when automatic operation is effectively set, its priority is next higher to the inching command.

■ **15:Auto Operation Suspended** — When the programmable automatic operation function is selected and the function terminal is activated, the ac drive starts to execute the sequential operation according to the preset 16-stage speed frequency. The operation may be suspended by using the function of Suspension Terminal and resumed when the suspension is over. If the operation is resumed by turning off the Automatic Operation Terminal, the operation procedure starts to execute from the original point.

■ **16 : Counter Signal Input**— The width of the trigger-off signal shall not be less than 2ms while paying attention to the setting of the related Parameter F67.

■ **17 : Counter Zero-in** — When enabled this functional terminal, the signal from externally triggered signal, such as signal from the proximity switch and photoelectric detector, can be input the count terminal, and then the frequency inverter will follow to count and check the set values relevant to the Parameter F67. To zero the count value, use this Counter Zero-in terminal to proceed the zeroing.

■ **18 : Free Run Stop** — When the function terminal signal is inputted, the ac drive immediately turns off its output for the motor to coast to stop due to the system friction .

■ **19 : Auto Save Energy Operation**— When the function terminal signal is inputted, the ac drive starts to perform internal operation to control the operation at an optimal efficiency setting. (For details, refer to F124.)

■ **20 : Second Unit PID**— Start the internal 2nd PID Gain Ratio Mode.(F197~F200)

■ **21 : Di activates PID**— PID control module is activated by the input from themulti-function terminal. (For details, refer to F186).

■ **22 : Di activates AV2**— When selected Di for activation, the frequency command source shall be AI mandatorily.AV2.

■ **23 : Di activates AI**— When selected Di for activation, the frequency command source s hall be AI mandatorily.

※ When this function is in use, other functions shall not be given to AV2 and AI for usage (Such as F5, F174, F187~F189).

※ Priority : Inching＞Auto operation＞Di activates AV2＞Di activates AI＞Multi-stage speed command＞F5 frequency command source .

■ **24: Zero servo**— After inputting the functional signal, the ac drive will decrease the frequency to 0 Hz according to the deceleration time, or charge the current when received the command at stop so as to enable the motor rotor to rotate constantly without drifting.

※ When set F147 control mode to **2 : Open Loop V/F vector Control**, **3 : Closed Loop V/F vector Control** and **4 : Sensorless V/F vector Control**, the charging current controlled by zero-servo shall be established by F126 voltage-increase value.

※ When set F147 control mode to **5 : Closed Loop Flux Vector Control**, **6 : Sensorless Flux Vector Control**, the setting to F171 low-speed magnetic-field magnification factor shall control the current charging from zero-servo.

Digital (Do) Ouput

R	Parameter	Designation	Description	Range	Ex-factory Setting
×	F75	Relay1 Setup	No specific setup sequence is specified for the function of these output terminals. Upon selecting the function, read first the description and related requirements of the function.	0~12	1
×	F76	DO1 Setup			11
×	F77	DO2 Setup			6
×	F78	DO3 Setup			7
×	F79	Relay2 Setup			3

- **0: Disabled** — This function allows the output terminal function to be in the states of being disabled.
- **1: Output in Case of Abnormality (NO)** — In case of any abnormality detected by the ac drive, the contact is in closed status.
- **2 : Output in Case of Abnormality (NC)** — If any abnormality is detected by the ac drive, or CPU is losing POWER, this contact turns into open status. The normal output is closed status.
- **3 : In Operation** — When the ac drive enters into standby mode or is in operation, this contact is in closed status.
- **4: Frequency Attained 1** — When the output frequency of the ac drive reaches Specified Frequency 1 (**F81**) , this contact is in closed status.
- **5 : Frequency Attained 2** — When the output frequency of the ac drive reaches Specified Frequency 2(**F82**) , this contact is in closed status.
- **6 : Consistent Frequency** — When the output frequency of the ac drive is consistent with the setting for the Master Speed through Stage **15** frequency, the range to judge the consistent frequency is set by (**F80**) , and this contact within that range is in closed status. (Unsuitabe application On the Analog signal speed command).
- **7 : Overload Alarm** — When the ac drive detects output overload, this contract is in closed status. The OL value = (**F142**) Rated current of the Motor (**F96**) overload current level time-counting.
- **8 : OL Timing Forecas** — When the multiplication value of electronic thermal sensor built in the ac drive has reached 80% of the time of trip-off level, this contact is in closed status. The OL level is set with (**F96**) ; and the multiplication time, with (**F97**).
- **9: Counter Cycle is Up** — When the ac drive is performing external count and **F84** the numeric value of the counting is equal to the setting of, this contact is in closed status, and then clear the numeric value to restart counting.

■ **10 : Comparator Counting is Up** — When the ac drive is performing external **F85** count and the numeric value of the counting is equal to the setting of, this contact is in closed status, and then clear the numeric value restart counting.

■ **11 : Zero-Speed Detected** — When the ac drive is in downtime or the frequency set is smaller than the setting of the minimum activation frequency, this Contact is in closed status.

■ **12 : Timer function output** — When activating the ac drive for operation, the contacts at the multifunctional output terminal (Timer function output) will be closed in response to the F86 ON-Delay Time Counting; and this function must be associated with the F6 DC Brake Function while the DC Brake energy can be set according to the requirement.

R	Parameter	Description	Range	Unit	Ex-factory Setting
×	F80	Frequency consistent width	0.0～10.0	Hz	1.0

◎ When the output frequency falls between the frequency setup range of ±F80 the output multi-function terminal remains at ON status.

×	F81	Frequency Attained 1	0.0～400.0	Hz	60.0
×	F82	Frequency Attained 2	0.0～400.0	Hz	60.0
×	F83	Magnetic Stagnation Width Attained	0.0～10.0	Hz	1.0

◎ When the output frequency is higher than the setting of the Frequency Attained, the multi-function output terminal set will remain in ON status; when the output frequency drops to the Magnetic Stagnation width below the Frequency Attained, the multi-function output terminal is in OFF status

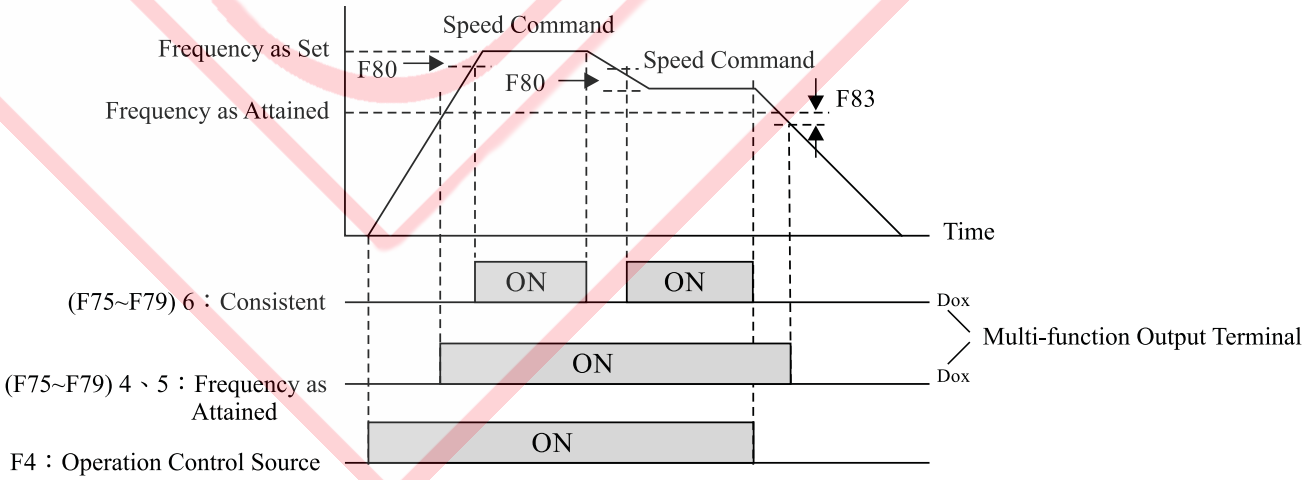

×	F84	Counting Cycle	0～30000	P	1000

◎ This parameter is applied to set up the counting cycle of the built-in counter. Once the counting reaches the preset value of the counting cycle, any multi- function output terminal may be selected to trigger the terminal output (Fig.1).

R	Parameter	Description	Range	Unit	Ex-factory Setting
×	F85	Comparative Counting	0～30000	P	500

◎ This parameter is applied to set up the comparison value of the built-in counter. Once the counting reaches the preset value of the counting cycle, any multi- function output terminal may be selected to trigger the terminal output to enter into ON status, and then enter into OFF status until the F85 counting cycle setting is up(Fig. 1).

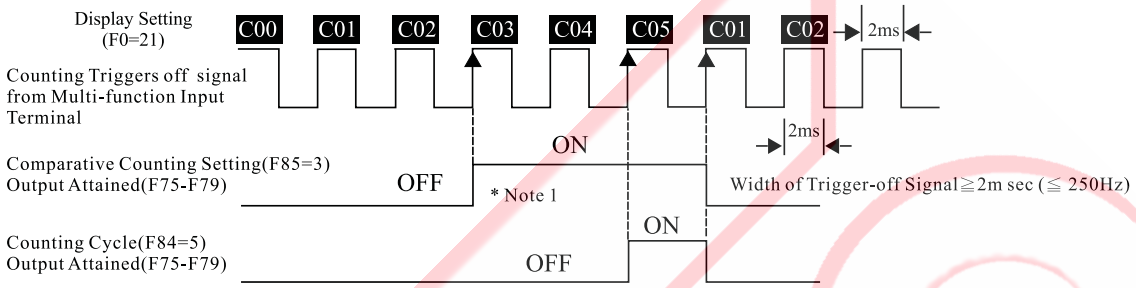

(Fig 1) *Note 1：Attention to description and setting of parameter F67 is urged.

×	F86	ON-Delay Time Counting	0.00～60.00	Sec	0.00
×	F87	OFF-Delay Time Counting	0.00～60.00	Sec	0.00

◆ A suitable ON/OFF delay time (F86, F87) setup can eliminate the bounce noise from general detectors and switches, or can be applied to a field where other special requirement in mechanics is needed.

◆ When activating the ac drive for operation, the contacts at the multifunctional output terminal (Timer function output) will be closed in response to the F86 ON-Delay Time Counting; and this function must be associated with the F6 DC Brake Function while the DC Brake energy can be set according to the requirement.

◆ When stopping the ac drive, the contacts at the multifunctional output terminal (Timer function output) will be open-circuit in response to the F87 OFF-Delay Time Counting; and this function must be associated with the F7 DC Brake Function while the DC Brake energy can be set according to the requirement.

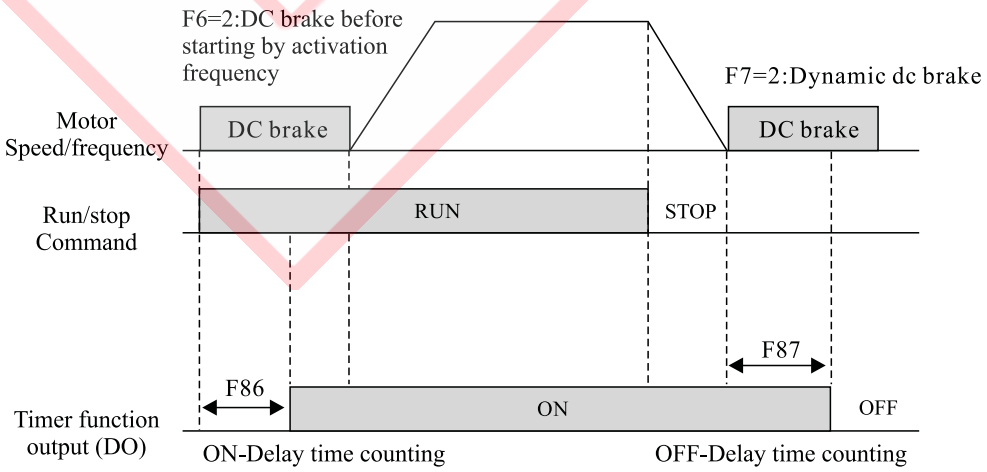

Jumping Frequency

R	Parameter	Description	Range	Unit	Ex-factory Setting
×	F88	Frequency Skip 2	0.0～400.0	Hz	0.0
×	F89	Frequency Skip 2	0.0～400.0	Hz	0.0
×	F90	Frequency Skip 3	0.0～400.0	Hz	0.0
×	F91	Frequency Skip Width	0.0～10.0	Hz	0.0

◆ Functions of Frequency Skip and Frequency Skip Width are exclusively provided to avoid resonance to the mechanical system under certain frequency, where it is unavoidable to pass through during acceleration or deceleration, and operation under such frequency is strictly prohibited.

◆ If the frequency skip width is set at 0Hz, all the frequency-skip points are void.

◆ Frequency skip conditions must satisfy F88≦F89≦F90, and the operation must be provided in sequence as set. Skip frequencies respectively at Points 1, 2, 3 may be partially or entirely overlapped to increase the operation of bandwidth from different segments, and to serve as the frequency skip area for one point or two points.

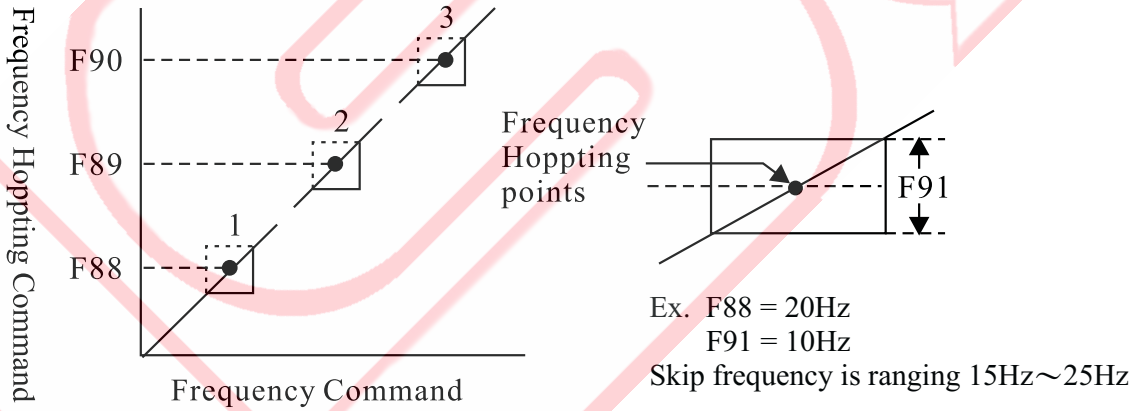

Motor Protection Setup

×	F92	Stalling protection setup	0～31		3

■ **bit 0 : Protection function F93** — To enable the function for stalling voltage protection during deceleration.

■ **bit 1 : Protection function F94** — To enable the function for stalling current protection during acceleration.

■ **bit 2 : Protection function F96** — To enable the function electronic thermal relay.

■ **bit 3 : Inhibit inertia at motor start** — To convert the motor-regenerative energy into motor magnetic field for inhibiting the consumption a little bit.

■ **bit 4 : Automatic Voltage Regulation(AVR)** — To enable the function of Automatic Voltage Regulation (AVR).

◎ When the input power supply is higher than the maximum output voltage (U.V.W.) set to function (F121), this AVR function is able to regulate the voltage within the set value of F121 automatically; thus, the motor can have a stable torque output, and the motor is not easy to access a temperature rise to increase the torque sharply, either. However, when the input power supply is lower than the set value of F121, the output voltage will vary with the input voltage as well.

INHIBIT

AVR shall not be activated for compensation of variation when enabled 5: Close-loop vector control and 6: Sensor-less vector control in (F147) control mode.

※ Digital increment table

Set values	Bit 4 2^4=16	Bit 3 2^3=8	Bit 2 2^2=4	Bit 1 2^1=2	Bit 0 2^0=1	Set values	Bit 4 2^4=16	Bit 3 2^3=8	Bit 2 2^2=4	Bit 1 2^1=2	Bit 0 2^0=1
0	×	×	×	×	×	16	◯	×	×	×	×
1	×	×	×	×	◯	17	◯	×	×	×	◯
2	×	×	×	◯	×	18	◯	×	×	◯	×
3	×	×	×	◯	◯	19	◯	×	×	◯	◯
4	×	×	◯	×	×	20	◯	×	◯	×	×
5	×	×	◯	×	◯	21	◯	×	◯	×	◯
6	×	×	◯	◯	×	22	◯	×	◯	◯	×
7	×	×	◯	◯	◯	23	◯	×	◯	◯	◯
8	×	◯	×	×	×	24	◯	◯	×	×	×
9	×	◯	×	×	◯	25	◯	◯	×	×	◯
10	×	◯	×	◯	×	26	◯	◯	×	◯	×
11	×	◯	×	◯	◯	27	◯	◯	×	◯	◯
12	×	◯	◯	×	×	28	◯	◯	◯	×	×
13	×	◯	◯	×	◯	29	◯	◯	◯	×	◯
14	×	◯	◯	◯	×	30	◯	◯	◯	◯	×
15	×	◯	◯	◯	◯	31	◯	◯	◯	◯	◯

※ ◯ : protection function enabled, × : protection function disabled, no protection function when set value is 0.

R	Parameter	Description	Range	Unit	Ex-factory Setting
×	F93	Deceleration Stalling voltage Setup	1.00～1.25		1.20

◎ In performing deceleration, the ac drive will stop decelerating (output frequency suspended from decreasing) due to rising DC bus voltage when the motor regenerates energy into the ac drive due to the high motor load inertia; The ac drive will continue to perform deceleration only when the dc bus voltage falls below the setting.

◎ Stalling voltage level =(F129)RST Mains input voltage×1.414×(F93) Stalling Voltage %.

Example：Stalling voltage level = 220Vac × 1.414 × 120% = 373Vdc

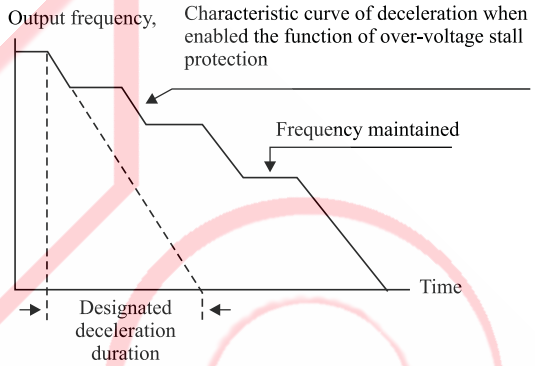

×	F94	Acceleration Stalling Current Setup	0.50～2.50	Pu	1.50

◎ In performing acceleration, the AC drive will stop the acceleration (Output frequency is suspended from increasing) when the output current increase from the AC drive is over the setting of the stalling current level due to fast acceleration or overload of motor; and the AC drive continues to accelerate only when the current falls below the setting.

◎ Stalling current level = (F142) Motor Rated Current × (F94) Stalling Current Gain.

[Example]: Stalling Current Level = 4A × 150% = 6.0A

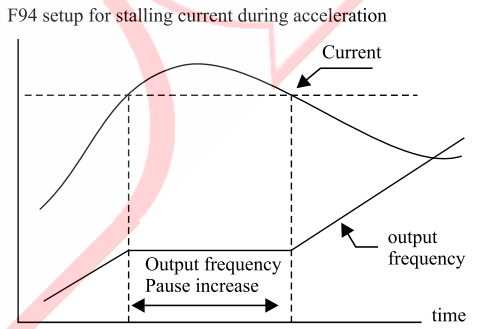

Function for stalling current protection during acceleration

WARNING

The upper limit of stalling current should never be two-fold higher than the rating of the ac drive.

×	F95	Start Thermal relays the current setting of position	0.80～1.30	Pu	1.00
×	F96	Current level of electronic thermal relay	1.00～2.50	Pu	1.50
×	F97	Acting time of electronic thermal relay	0.1～120.0	Sec	60.0

$$\int_0^t (I_A^2(t) - F_{95}^2)\cdot dt > (F_{96}^2 - F_{95}^2)\cdot F_{97}$$ => Activate the thermal relay

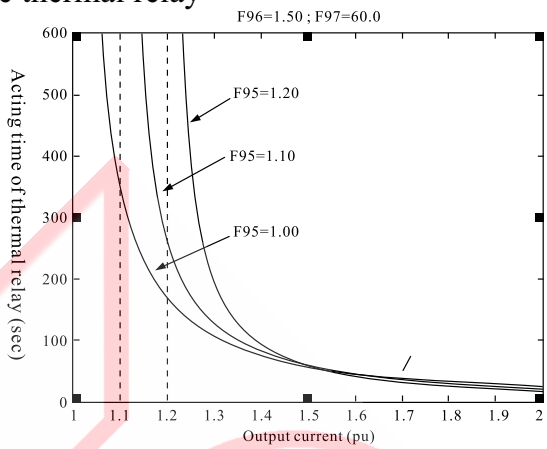

Where, $I_A(t)$ is the output current.

Example: F_{95} = 1.00，F_{96} = 1.50，F_{97} = 60.0 seconds; if $I_A(t)$ = 1.2*pu*, then the thermal relay will be activated or 170.45 seconds; the computation is as follow：

$$\int_0^t (1.20^2 - 1.00^2)\cdot dt \le (1.5^2 - 1.00^2)\cdot 60.0$$

$$\Rightarrow 0.44\times t \le 75$$

$$\Rightarrow t \le 170.45 \text{ sec}$$

The acting duration of thermal relay varies with different output currents as shown in Figure 1. Increase of F95 (to enable the thermal relay to initiate the integral current level) can heighten the protection level of thermal relay; for example, an output current below 1.20pu will not trigger the thermal relay at F95=1.20 as shown in the illustration.

R	Parameter	Description	Range	Unit	Ex-factory Setting
×	F98	V/F Output current Limit	0.20～1.45		1.30

◆ When set F147=2, or 3, or4, and output current in excess of the set value, then the AC drive will be reduced thereof output voltage quickly to protect the AC drive from tripping at over-current; so the ideal setting is to have the F94 set value less than F98 set value by more than 20%.

※ Note：Output current limit level：Rated current of frequency x 2 x F98 set value.

×	F99	Leaking current,3-phase current,and abnormal level setup	0.001～0.500	Pu	0.250

◎ This function is designed to protect the output side of inverter from bad wiring construction and defective motor insulation. When detected a current over the set value for abnormal level from the three phases at output side (U.V.W.) of inverter, it is an abnormal leaking current.

×	F100	Over Temp. Protection Setup	60.00～95.00	℃	88.00

◎ This function is provided to detect the temperature protection level of the built- in heat sink. Once the setting is challenged, the ac drive trips to protect from overheating.

×	F101	Fan Activating Temp. Setup	40.00～60.00	℃	45.00

◎ Upon Power ON, the fans automatically run for one minute and then revert to the control by the fans activation temperature setting.

R : Parameter is changeable during operation (◯)

R	Parameter	Description	Range	Unit	Ex-factory Setting
×	F102	Brake Discharge Level	1.12～1.40		1.20

◆ Discharge Brake Level = F129(R.S.T Mains input voltage) × 1.414 × F102(DC-bus Brake Level).

Example：F129 = 220V　F102 = 1.20
Discharge **Brake** Level = **220Vac** × **1.414** × **1.20** = **373Vdc** (discharge level.)

WARNING

Built-in Dynamic Braking has been provided for the ac drive of 11KW or less. External braking unit must be provided for AC drive of other Hp spec.

Automatic Operation function

×	F103	Automatic Operation Mode	0～4		0

■ **0 : Disable** — Automatic operation is disabled.

■ **1 : Reciprocal mode** — To perform reciprocal automatic operation from Master Speed through Stage 15 Speed.

◎ **Reciprocal Fashion Performed** — Master Speed → Stage 1 Speed ... Stage 15 Speed → Stage 14 Speed … Master Speed → Master Speed … etc, and then the operation is continued in reverse order to complete a cycle of a total of 32 speeds. The number of cycle times is set by **F104** and displayed with the stage speed monitor. The ac drive automatically stops once the setting of cycle times is up.

■ **2 : Cyclic mode** — To perform automatic operation clockwise from Master Speed through Stage 15 Speed.

◎ **Cyclic Fashion Performed** — The automatic operation is performed clockwise from Master Speed … Stage 1 Speed …Stage 15 Speed→Master Speed→Stage 15 Speed… etc. It is repeated clockwise with the number of cycles to be set by F104 and displayed on the stage speed monitor together with the number of cycles and stage speed. The ac speed automatically stops when the setting of cycle times is up.

■ **3 : Master Speed after Reciprocation mode** — This function is performed same as that described in the setting of 1: Reciprocal fashion with the exception that the master speed frequency operates upon the expiry of the number of cycles.

■ **4 : Master Speed after Cyclic mode** — This function is performed same as that described in the setting of 2: Cyclic fashion with the exception that the master speed frequency operates upon the expiry of the number of cycles.

WARNING

Once Automatic Operation setup is done , the execution is subjected to the programmed mode of the multi-function input terminals 14 : Automatic Operation and 15 : Automatic Operation Suspended. The automatic operation control is second in priority to the inching frequency command while the Operation Control and Frequency Command fails to execute operation control(settings 1~4 enable activation of automatic operation) (Refer Page 5-19~5-21).

R	Parameter	Description	Range	Unit	Ex-factory Setting
×	F104	Number of Cycles	1～1000	Cycle	1

◎ This function defines the number of operation cycles needed in automatic operation.

×	F105	Time of automatic operation mode at Master speed	-30000～30000	Sec	5
×	F106	Time of automatic operation mode at stage 1	-30000～30000	Sec	0
×	F107	Time of automatic operation mode at stage 2	-30000～30000	Sec	0
×	F108	Time of automatic operation mode at stage 3	-30000～30000	Sec	0
×	F109	Time of automatic operation mode at stage 4	-30000～30000	Sec	0
×	F110	Time of automatic operation mode at stage 5	-30000～30000	Sec	0
×	F111	Time of automatic operation mode at stage 6	-30000～30000	Sec	0
×	F112	Time of automatic operation mode at stage 7	-30000～30000	Sec	0
×	F113	Time of automatic operation mode at stage 8	-30000～30000	Sec	0
×	F114	Time of automatic operation mode at stage 9	-30000～30000	Sec	0
×	F115	Time of automatic operation mode at stage 10	-30000～30000	Sec	0
×	F116	Time of automatic operation mode at stage 11	-30000～30000	Sec	0
×	F117	Time of automatic operation mode at stage 12	-30000～30000	Sec	0
×	F118	Time of automatic operation mode at stage 13	-30000～30000	Sec	0
×	F119	Time of automatic operation mode at stage 14	-30000～30000	Sec	0
×	F120	Time of automatic operation mode at stage 15	-30000～30000	Sec	0

◎ To set the operation time and direction by the stage speed enabled. The setting of negative value is for operation in reverse direction and operation time counts; and the setting of positive value is for forward direction and operation time counts. Refer to the setting given in F13 if FWD and REV operation control is required.

◎ Frequency of any stage of speed may be set at 0Hz in the course of performing the stage speed in automatic operation to provide the function of stop by timer; and the frequency of any stage speed may be set to be disabled by setting the automatic operation time at 0 sec to skip to the frequency of the next stage speed. please see parameter setup F17～F32.

※ The positive & negative signs shown in F105～F120 denote the running direction.

Magnetic flux setup

R	Parameter	Description	Range	Unit	Ex-factory Setting
×	F121	Maximum Output Voltage (U.V.W)	0.50～1.00	Pu	1.00

◎ The range of the input voltage to the ac drive may be of AC 180V~240V (or 380V~480V). The maximum output voltage may be set by this parameter function for the maximum rms voltage to compensate for the rated voltage of the motor.

Output voltage = (F141) Motor rated voltage × (F121) Maximun output voltage

※ The setting for F21 maximum output voltage at 1.00 is optimum when (F147) control mode is selected at 2 : Open Loop V/F vector Control, 3 : Closed Loop V/F vector Control, or 4 : Sensorless V/F vector Control.

※ ATTENTION! The maximum output voltage should not be greater than 95% and the internal must be done with adjustment of magnetic filed control function if 5 : Closed Loop Flux Vector Control or 6 : Sensorless Flux Vector Control is selected from (F147) control mode. Any setting greater than 95% will be made at the cost of mtic field compensation efficiency, and even resulting in tripping. The optimum setting is (90%～95%).

×	F122	Maximum Voltage Frequency	0.50～2.00	Pu	1.00

◎ The setting of output voltage, frequency of ac drive has to be comply with motor's

【normal rated. [Max. voltage frequency (1.00) will be based on F143 rated frequency】.

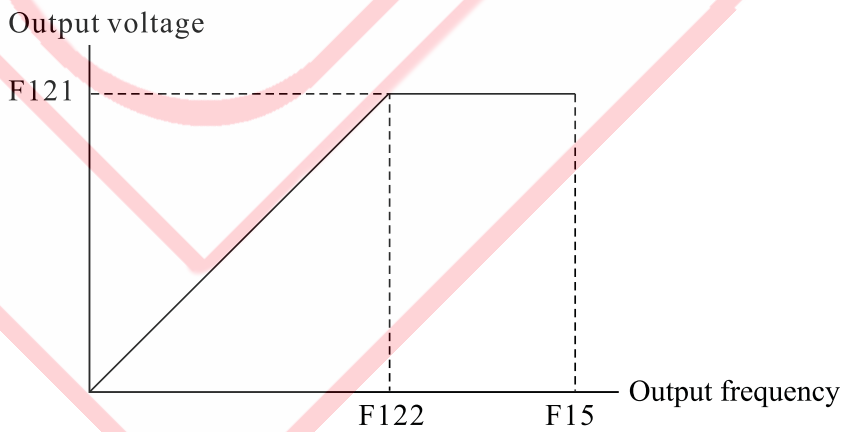

Maximum Output voltage and frequency (V/F)

×	F123	V/F Curve option	-10～5		0

◎ The relation between output voltage and output frequency is defined in terms of square decrease, linear or square increase changes as illustrated below.

◎ With the setting of 0, it relates to a linear V/F curve applicable to the load of a constant torque.

◎ With the setting selected from the range of –1 ~ -10, it relates to square decrease V/F curve, applicable to blower and pump.

◎ With the setting elected from the range of 1 ~ 5, it relates to square increase V/F curve.

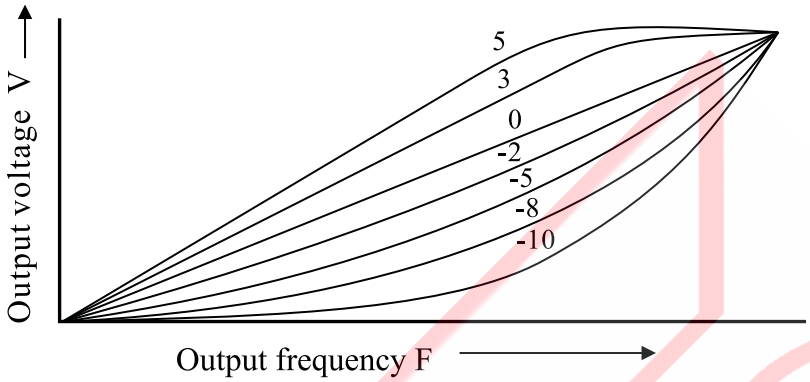

R	Parameter	Description	Range	Unit	Ex-factory Setting
×	F124	Energy-saving Control Mode	0～2		0

◎ Upon activating the function of save energy control and the operation is at full voltage during acceleration/deceleration; the optimum output power will be automatically controlled by the load power during the operation at constant speed while the output speed is under monitor without stalling.

■ **0 : Normal Mode**— Motor operation controlled in normal mode without activating economy control.

■ **1 : Efficiency control mode**— Economy control command to be controlled by internal calculation.

■ **2 : External Terminal Control**— Economy control command to be controlled by external terminal input signals.

※ **Recommendation: In selecting the save energy control function from (F147) control mode, 5: Closed Loop Flux Vector Control and 3: Closed Loop V/F vector Control are preferred; followed by 4: Sensorless V/F vector Control and 6: Sensorless Flux Vector Control; while 2: Open Loop V/F vector Control fails to perform economy control.**

※ **ATTENTION! This function is not applicable to any system with sudden and frequent load changes, or load already approaching the full load (rated) operation during the operation.**

◯	F125	Oscillation inhibit gain	0.0～100.0	%	15.0

◆ A current oscillation will be taking place when running the motor at a certain section of frequency; by then, adjusting the set value of parameter can effectively correct the situation. The current-oscillating area with a higher horsepower will appear at a lower frequency bandwidth; that means the set value can be increased duly. However, an excessive setting may be prone to generating a too-big excitation current; so please make the adjustment appropriately.

◆ This parameter is an exclusive function for V/F control mode. (The control mode of F147=2, 3, or 4)

R	Parameter	Description	Range	Unit	Ex-factory Setting
◯	F126	Voltage boosting value (V/F Torque Compensation Setting)	0.000～0.100	Pu	0.020

◆ This function provides the means for proper adjustment of the corresponding output voltage at 0Hz so as to improve the torque performance of the motor as demonstrated in the lower speed area.

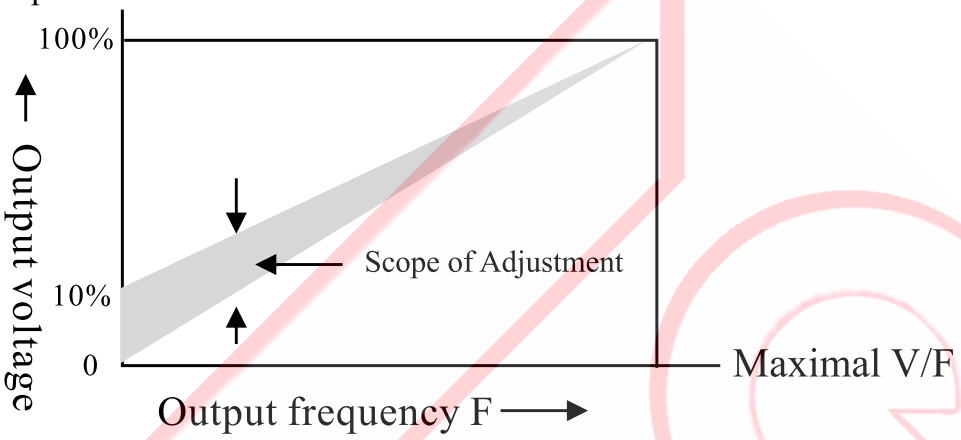

The voltage increased at 0Hz= F141 × F126
Example：220Vac × 0.020 = 4.4Vac (Boost)

◆ Excessive adjustment will cause high motor current resulting in overload, and further leading to the activation of functions (F94~F96) of output limiting current. Therefore, confirm the output current value displayed under F0=12 before making the adjustment for the optimum setting.

◆ Unless otherwise specified, 3Hz is sufficient to activate the motor to run in the V/F control mode.

×	F127	PWM Modulation Method	1～2		1

■ **1: 3-Phase SVPWM Modulation**－ Use of 3-phase modulation driven motor obtains the smoothest current output and comparatively quiet operation.

■ **2: 2-Phase SVPWM Modulation**－ 2-phase modulation technology allows the time reduction of the IGBT On/Off operation, thus reducing the switching loss.

◎ Excessively long wiring for the motor is prone to reflective voltage feedback (tidal effects) from the motor, and this acts as additional load to the ac drive (power loss). In such case, the use of 2-phase modulation driven motor and lower setting of F128 switching frequency would help to reduce the refective motor voltage, harmonics, and EMI problem.

※ **ATTENTION! If the wiring length has to be made not less than 50M, AC Drive grade motor with higher voltage rating capability of its insulation is strongly recommended since excessive long cables will create greater parasitic induction, and higher multiple voltage loops. These can easily damage the motor insulation and the ac drive.**

※ **RECOMMENDATION – An output reactor should be installed whenever the wiring on the output side of the ac drive is 25M or longer (refer to P2-8).**

R	Parameter	Description	Range	Unit	Ex-factory Setting
×	F128	PWM Switching Frequency	1000～16000	Hz	5000

◆ This parameter sets up the carrier frequency in PWM output.

◆ The setting level of the carrier frequency will affect the EMI noise of the motor, switching loss of the IGBT and the heat dissipation due to switching loss as stated in the table given below:

Carrier F	Electromagnetic Noise	Switching	Heat Dissipation	Torque	Harmonics
1KHz	High	Low	Low	High	Low
↕	↕	↕	↕	↕	↕
16KHZ	Low	High	High	Low	High

×	F129	RST Input Voltage (rms)	150～500	Vac	220

◎ This parameter defines the standard input power supply voltage to the ac drive. The voltage working level and the voltage of ac drive would determine all related voltage working levels and voltage protection levels according to this parameter.

◎ F129 set value shall satisfy：F129 ≦ 1.5 × F141

×	F130	Vdc gain(read only)	50～300	Fold	140

◆ This parameter is to adjust the gain of DC-BUS voltage at both sides of capacitor; and the result from the gain will become one of the important parameters to the operation of [F0=10: Normal state voltage at dc side (Vdc)].

FM 1 AO waveform output (No.2.31 Special-Purpose)

×	F131	FM1 Analog output mode	0～1		0

■ **0 : PWM Pulse Output**— DC voltage is output to the FM1 terminal with the maximum range of DC0~10V/1mA.

■ **1 : Pulse Frequency Output**—Pulse frequency output equivalent to the output frequency x multiplying factor (F132) is output to the FM1 terminal.

◯	F132	Multiple ratio of pulse frequency 1	1～36		1

◎ Pulse frequency = output frequency × multiplying factor of pulse (with the maximum output of the pulse frequency at 1.25 KHz).

◯	F133	FM1 Multifunctional output setup	0～21		1

◎ Outputting an analog DC voltage DC 0~10V/1mA signal in a FM pulse manner can be taken to monitor the following 21 running status values of frequency inverter.(Similar to the function of F0 status display in Operator)

Setting	Function (100% Implication)	Setting	Function (100% Implication)
0	No output	11	Excitation Current Command
1	Motor Output Speed	12	Torque Current Command
2	PG Feedback Speed	13	Excitation Current
3	Pulse Frequency Command	14	Torque Current
4	Sensor-less Vector Output Speed	15	True Power
5	Power supply Source Frequency	16	Reactive Power
6	Slip Frequency	17	PID% Output
7	Output Voltage	18	Keypad operate signal AV
8	Excitation Voltage	19	AV1
9	Torque Voltage	20	AV2
10	Output Current	21	AI

○	F134	FM1 Analog output gain/10V	0.50～8.00	Pu	1.00

◎ This function is applied to adjust the multiplying factor of the analog output of full voltage

×	F135	FM1 Analog polarity setup	0～1		0

◎ Polarity setup is essentially done with DC 5V as the potential point at "0". Accordingly, any voltage greater than DC 5V relates to FWD speed signal; and smaller than DC 5V relates to REV speed signal. This function is applicable only to the display of output frequency or speed); therefore, any other function given with the polarity setup is of no significance.

■ **0 : Without Polarity** — with 0V as the reference point, and with no capability to identify FWD and REV.

■ **1: With Polarity** — with 5V as the reference point, and with the capability to identify FWD and REV.

FM 2 AO waveform output (No.2.31 Special-Purpose)

R	Parameter	Description	Range	Unit	Ex-factory Setting
×	F136	FM2 Analog output mode	0～1		0
○	F137	Multiple ratio of pulse frequency 2	1～36		1
○	F138	FM2 Multifunctional output setup	0～21		10
○	F139	FM2 Analog output gain/10V	0.50～8.00	Pu	1.00
×	F140	FM2 Analog polarity setup	0～1		0

◎ Refer to FM1 parameter functions as FM2 parameter functions given in F136～F140 above are the same as that provided by FM1.

AC Drive Parameters (No.2.32 Special-Purpose)

R	Parameter	Description	Range	Unit	Ex-factory Setting
×	F131	Longest outage duration allowable	0～5000	ms	20

◆ If the power outage time is less than the allowable set value of time, it will follow the cycle of sequence to restart machine; otherwise, it will trip directly and display Err7 (DC voltage too low). During the low-voltage period, PWM output will be turned off and Lu warning will be displayed at the same time.

※ **Current vector control mode is not suitable for the function to follow the cycle of sequence to restart machine after power restoration from power outage.**

◯	F132	Terminal-actuating setup for failure reset and after power restoration	0～1		0

■ **0 : Direct Start** — When set 1: Digital input terminal control to F4 (Running Control source), and running control terminal (Di1 or Di2) is at normal close (ON) position, the frequency inverter will be started its running directly after inputting the power supply, power restoration and failure reset.

■ **1 : Return the Start Command Terminal (Di)** — When set 1: Digital input terminal control to F4 (Running Control source), and running control terminal (Di1 or Di2) is at normal close (ON), the frequency inverter will be started its running provided that command terminal (Di1 or Di2) shall be restarted (OFF first→ and then ON) after inputting the power supply, power restoration and failure reset.

FM 1 AO analogy output (No.2.32 Special-Purpose)

×	F133	FM 1 Ouput Mode	0～2		0

■ **0 : 0 ~ 10V** — FM 1 output corresponding value: 0～10V

■ **1 : ±10V** — FM 1 output corresponding value : ±10V

■ **2 : 4 ~ 20mA** — FM 1 output corresponding value:4～20mA

◯	F134	FM1 Multifunctional output setup	1～21		1
◯	F135	0V/4mA Bias Gain	0.0～700.0	%	0.0
◯	F136	10V/20mA Gain	0.0～700.0	%	100

◎ Outputting an analog DC voltage signal in an analog manner can be taken to monitor the following 21 running status values.(Similar to the function of F0 status display in Operator)

Setting	Function (100% Implication)	Setting	Function (100% Implication)
0	No output	11	Excitation Current Command
1	Motor Output Speed	12	Torque Current Command
2	PG Feedback Speed	13	Excitation Current
3	Pulse Frequency Command	14	Torque Current
4	Sensor-less Vector Output Speed	15	True Power
5	Power supply Source Frequency	16	Reactive Power
6	Slip Frequency	17	PID% Output
7	Output Voltage	18	Keypad operate signal AV
8	Excitation Voltage	19	AV1
9	Torque Voltage	20	AV2
10	Output Current	21	AI

FM 2 AO analogy output (No.2.32 Special-Purpose)

R	Parameter	Description	Range	Unit	Ex-factory Setting
×	F137	FM2 Output Mode	0～2		0

■ **0 : 0 ~ 10V** — FM 2 output corresponding value: 0～10V

■ **1 : ±10V** — FM 2 output corresponding value : ±10V

■ **2 : 4 ~ 20mA** — FM 2 output corresponding value:4～20mA

◯	F138	FM2 Multifunctional output setup	1～21		1
◯	F139	0V/4mA Bias Gain	0.0～700.0	%	0.0
◯	F140	10V/20mA Gain	0.0～700.0	%	100

◎ For the functions of FM2 parameter in the foregoing parameters F137 ~F140, please refer to the functions of FM1 parameter for the identical functions.

Motor nameplate

×	F141	Rated Voltage (rms)	150～500	V	N (Note 1, 2)
×	F142	Rated Current (rms)	1.0～1000.0	A	N(Note 1)
×	F143	Rated Frequency (Hz)	10.0～150.0	Hz	N(Note 1)

◆ F141～F146 related to the parameter group are to set up the nameplate of the motor; setting must be defined according to those rated settings on the motor nameplate.

(Note 2：F141：motor's rated voltage must ≧ F129 ÷ 1.5)

◆ When the capacity of drive is bigger than the motor, the setting of F142 has to be bigger than rated current of drive divided 9. (F142>the drive rated current ÷9)

◆ The range of F142 from minimum to maximum is [Rated current of ac drive x (0.16 ~1.3)].

◆ Rated voltage, rated current and rated frequency set as above for the type of the motor are related to parameter functions of the ac drive driven motor. (N1: N=ex-factory setting varies according to the respective ac drive used)

※ **When applied to a vector control mode, it is a must to know the correct set value of motor parameters in order to obtain a better motor speed-response curve and torque-characteristic curve.**

R	Parameter	Description	Range	Unit	Ex-factory Setting
×	F144	Rated Speed	0～9000	rpm	N(Note 1)

◎ This parameter is related to the rated speed of the motor.

◎ In vector control, the ac drive uses this parameter setting as reference to calculate the compensation for the slip speed. The running speed will not drop due to excessively large load on the motor, as automatic speed regulation control is provided to maintain constant speed.

×	F145	HP	0.5～600.0	HP	N(Note 1

◆ This parameter is related to the output rated power of the motor, please set up it according to the horsepower (HP).

Example：1.5KW / 0.75KW = 2.0HP

×	F146	No. of poles	2～32	P	N(Note 1

◆ Setting is defined with the number of poles of the motor

◆ With V/F control, synchronous speed of the motor is achieved to correctly display the speed.

◆ With vector control, the ac drive uses the setting of this parameter as reference to perform the speed vector control calculation.

※ **Note 1: Different setup for F141~ F146 shall be made according to the practically different motor capacities.**

Control Mode

×	F147	Control Mode Setup	-1～6		2

■ **<u>-1 : Static Electric Motor Parameter Auto-tuning</u>**— This function is to be used in some machinery equipment with heavy-load coupled that fail to be performed the dynamic parameter detection; however, it is necessary to correctly set up the F160 (Motor no-load current %) so that the motor electric parameter groups (F156~F159) can be detected in full with accuracy less than 0: Electric Motor Parameter Auto-tuning.

- **0: Static electric Parameter Detection** — The electric characteristics of the motor can be automatically calibrated through the auto-tuning of the static and dynamic parameters built in this parameter at F156~F160. (F156～F160)(F156～F160)

  Dynamic parameter tuning: By taking the forward rotation command to perform the operation at 2/3 speed (40Hz) of motor's rated frequency (60Hz) is able to carry out the detection of motor parameters at no-load or less than 50% load.)
  ※ Note: Display Pr RL (detection function)

- **1 : Mechanical Parameter Detection** — The mechanical inertia constant of the motor can be automatically calibrated by automatically setting up the mechanical constant value through the auto-tuning function of dynamic parameters built in parameter F161.
- **2 : Open Loop scalar Control** — The AC drive outputs SVPWM waveform to the motor.
- **3 : Closed Loop scalar Control** — The encoder mounted on the motor performs speed feedback for slip compensation so that the speed of the motor follows the speed command closely in high precision speed control.
- **4 : Sensorless scalar Control** — Relates to the voltage type sensorless control er, whereby the voltage command and feedback current signal are applied to estimate the stator magnetic flux and determines the slip for making the frequency compensation.
- **5 : Closed Loop Vector Control** — Relates to a current type closed loop(attached with PG) vector controller, to provide similar servo drive control with high precision speed response and torque control.
- **6 : Sensorless Vector Control** — Relates to a current type sensorless vector controller, whereby the current command and feedback current error are applied to provide torque current compensation, The torque characteristics in the lower speed area using this mode outperforms the voltage control type, and provided smaller speed slip.

※ The parameters F141~F146 of motor's nameplate to execute 0: Electric Motor Parameter Auto-tuning (Pr RL) must be firstly set if the control mode is set to 5: Closed Loop Flux Vector Control or 6: Sensorless Flux Vector Control; after its successfully execution, follow to set the 5: Closed Loop Flux Vector Control or 6: Sensorless Flux Vector Control accordingly. (Please see P4-2).

PROMPT : The application of 5: Closed Loop Flux Vector Control or 6: Sensorless FluxVector Control Mode must fall with the high speed [approximately 110% of the motor rated speed] where speed precision is the essence. Set up the following Parameter groups upon completing the electric parameter calibration:

1. F121 = 0.90～0.95

2. F128 =1K～8K[Carrier Frequency]

Encoder Setup

R	Parameter	Description	Range	Unit	Ex-factory Setting
×	F148	Speed Feedback	0～1		0

■ **0 : No Feedback** — Speed feedback disabled.

■ **1 : Encoder (PG)** — To perform speed feedback control to the master controller.

×	F149	Encoder (PG) Pulse	600～2500	P/rev	1024

◎ Please set up a correct number of pulse wave in order to perform a precise speed control.

×	F150	Encoder (PG) Direction	-1～1		1

■ **-1 : B leads A** — the motor operates in REV direction.

■ **0 : Single-phase pulse command** — Single-phase feedback allows only one-direction operation.

■ **1 : A leads B** — the motor operates in FWD direction.

◯	F151	Encoder (PG) feedback speed / filtration time	0.0～100.0	ms	2.0

◆ This function can be taken to filter out the noises generated from the pulse waves of motor and Encoder.

×	F152	PG OFF-line detection time	0.00～10.00	Second	3.00

◆ PG off-line detection time (F152) is able to detect if the wire connection of Encoder is broken or bad connection.

◆ When set the detection time to 0.00, function for detecting the PG broken wire is disabled. This function is suitable for torque limit and torque control.

×	F153	Pulse command	600～2500	P/rev	1024

◎ To set up the pulse number command needed per revolution of motor. (The maximum response input pulse frequency is 300 KHz).

$$F_P(\text{Hz}) = \frac{\text{Motor's revolving speed at the highest uotput}}{60} \times \text{P (pulse number)} = \text{P/rev}$$

◎ When a quick response is required, please set up the acceleration/deceleration time for operating the ac drive to the minimum value.

×	F154	Pulse command direction setup	-1～1		1

■ **-1 : B leads A** — The motor operates in REV direction.

■ **0 : Single-phase Pulse Command** — Pulse frequency command is for phase A while operating direction command is for phase B.

■ **1 : A leads B** — The motor operates in FWD direction.

◎ After the completion of confirming the start direction by A-leading, B-leading, then a smooth control of forward/backward rotation direction command is achievable.

R	Parameter	Description	Range	Unit	Ex-factory Setting
×	F155	Pulse Command multiplying factor	0.010～10.000	χ	1.000

◎ Preset multiplying factor and adaptation with Encoder (PG) allows precise linked operation by ratio.

※ F148～F153 Relates to the encoder setup group, an encoder speed feedback card interface board provided with two sets of control interface to perform high precision speed control must be installed.

PG-AB2 input mode setup

★ F150 Programmer (PG) input direction = 1:A leads B

- **Phase A, B pulse trains, Phase A leads Phase B by 90 degrees for forward rotation (Positive/negative edge trigger) (fourfold frequency multiplication)**
- **A1, B1 are pulse trains input by frequency speed command**

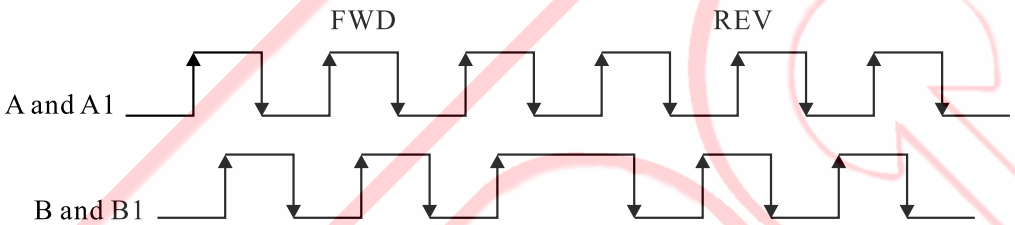

★ F150 Programmer (PG) input direction = -1:B leads A

- **Phase A, B pulse trains, Phase B leads Phase A by 90 degrees for backward rotation (Positive/negative edge trigger) (fourfold frequency multiplication)**
- **A1, B1 are pulse trains input by frequency speed command**

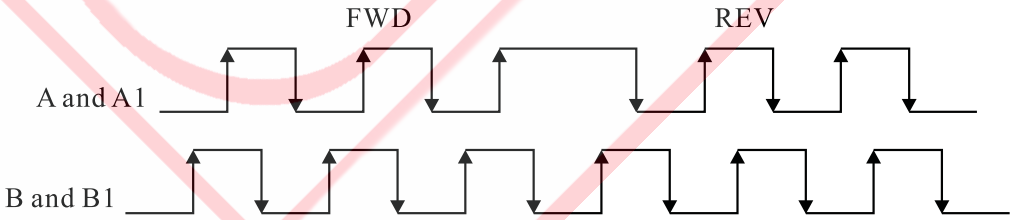

★ F150 Programmer (PG) input direction = 0:Single phase feedback/command

- **Phase A is a pulse train**
- **A1 is a pulse train input by frequency speed command, phase B1 is for direction while symbol L is for backward rotation and H for forward rotation.**

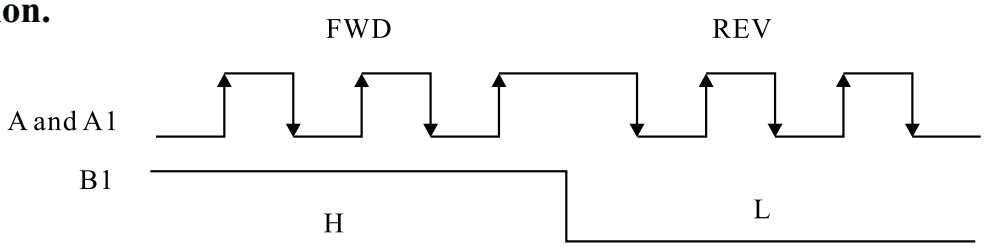

※ **Encoder (PG)**－Relates to the master encoder to perform speed feedback. Encoder mounted to the motor is connected to the interface board of Encoder (PG) to perform speed feedback, and speed error compensation so as to achieve high precision speed control.

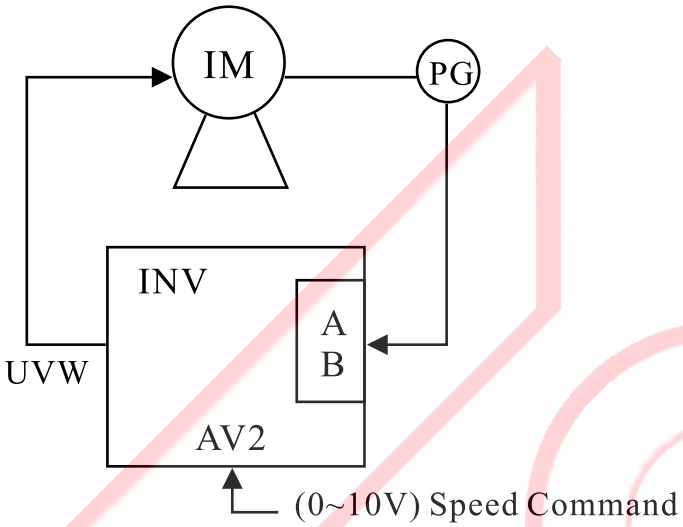

※ **Pulse Frequency Command**－ By taking the feedback Encoder pulse to perform a synchronous magnification as the speed command source with master encoder (PG) further equipped is able to perform a synchronous & serial operation or proportional linking movement for multiple units at a precise speed.

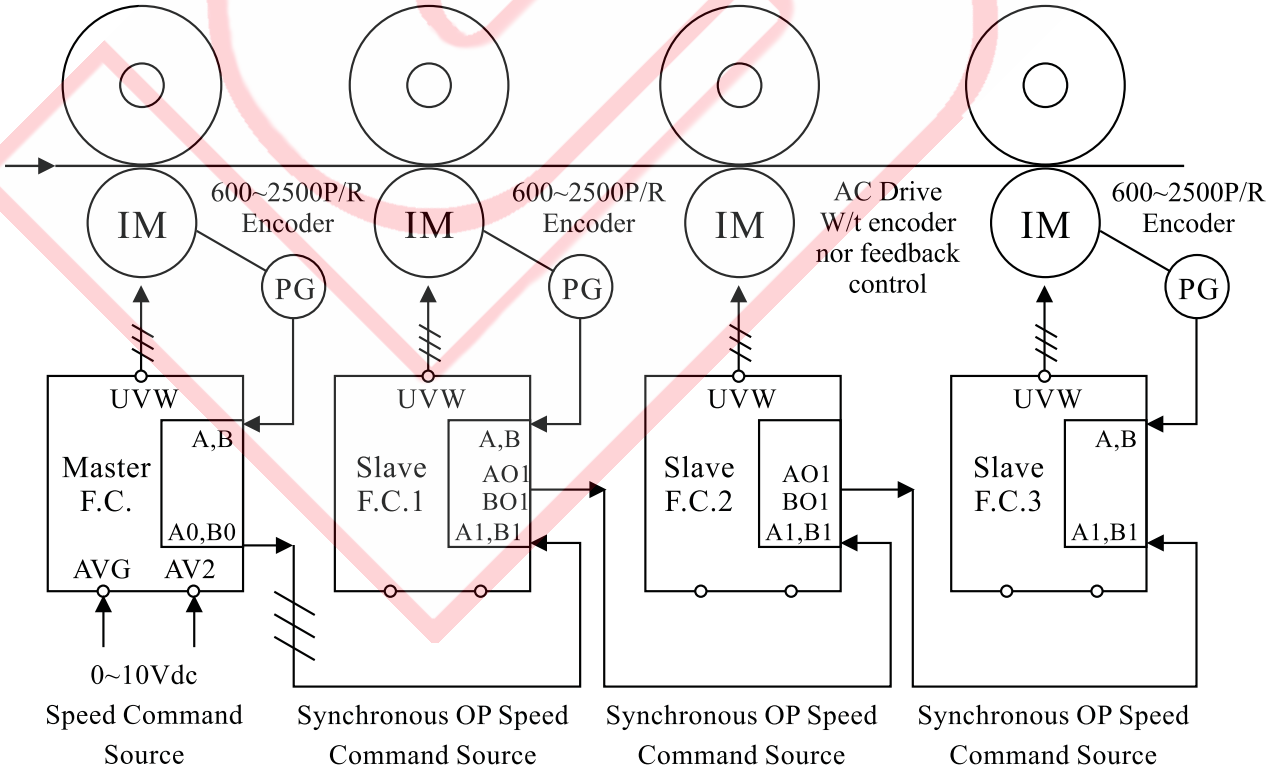

Application Example: Universal Digital Synchronizer System Operation in Series

Motor Electric Parameters

R	Parameter	Description	Range	Unit	Ex-factory Setting
×	F156	Stator Resistance	500～32767	Pu:Q17	10000
×	F157	Rotor Resistance	500～32767	Pu:Q17	8000
×	F158	Stator Inductance	3250～32767	Pu:Q12	9000
×	F159	Mutual Inductance	3250～32767	Pu:Q12	8750
×	F160	No-load current (%)	12.50～99.00	0.01%	40.00

※ This parameter group can be automatically set by F147 Control Mode- Electrical Parameter Auto-tuning Function. Modification of the setting by user is not required.

If the auto-tuning fails, manually enter the Parameters F156, F157,F158, F159 and F160. Obtains the five parameters from the Motor manufacturer, respectively Rs: Stator Resistance, Rr: Rotor Resistance, Ls: Stator Inductance, and Lm: Mutual Inductance, No-load current.

EXAMPLE : Motor manufacturer provides the parameters :

Rs=0.3Ω Rr=0.303Ω Ls=Lr=0.0477H Lm=0.0456H

Motor Ratings： 220 V, 14 A, 60 Hz, No-load current 4.2A

Computation is as follow :

$$V_{base} = 220\sqrt{2}/\sqrt{3} = 179.63 \ \text{(volt)}$$
$$I_{base} = 14\sqrt{2} = 19.8 \ \text{(A)}$$
$$\omega_{base} = 2\pi\ 60 = 377 \ (rad/s)$$

$$R_{base} = V_{base}/I_{base} = 9.07\,(\Omega)$$
$$L_{base} = R_{base}/\omega_{base} = 0.02406\ (H)$$

$$\overline{R}_s = \frac{R_s}{R_{base}} * 2\text{^}17 = 0.0331 * 2\text{^}17 = 4338 \ldots\ldots \text{(F156)}$$

$$\overline{R}_r = \frac{R_r}{R_{base}} * 2\text{^}17 = 0.0334 * 2\text{^}17 = 4378 \ \ldots\ldots \text{(F157)}$$

$$\overline{L}_s = \overline{L}_r = \frac{L_s}{L_{base}} * 2\text{^}12 = 1.9825 * 2\text{^}12 = 8120 \ldots\ldots \text{(F158)}$$

$$\overline{L}_m = \frac{L_m}{L_{base}} * 2\text{^}12 = 1.8953 * 2\text{^}12 = 7763 \ldots\ldots \text{(F159)}$$

No-load current (%) ＝ (motor no-load current / motor rated current)×100
＝ (4.2A / 14A)×100 ＝30(%).....(F160)

Note: In the calculation, 2^12 and 2^17 are constants in format Q and shall not be changed. (2^12 = 4096, 2^17 = 131072)

×	F161	Mechanical Constant(Rotor Inertia)	0～30000	Q16	1500

◎ To determine the rotor inertia of the motor. (Motor rotor inertia calibration must be when F147 : 5 Closed Loop Flux Vector Control is used).

Flux Estimation Tester

R	Parameter	Description	Range	Unit	Ex-factory Setting
×	F162	Magnetic Flux Estimator Bandwidth (LPF)	1.0～20.0	Hz	3.0

◆ A smaller set value will lead to a higher low-speed torque, a smaller speed error that makes the speed easy to be unstable.

A higher set value will lead to a smaller low-speed torque, a bigger speed error that makes the speed stable.

※ Suitable for F147 = **6 : Sensorless Flux Vector Control** mode.

×	F163	Speed Estimator Bandwidth (LPF)	1.0～20.0	Hz	4.0

◆ A small set value will make the speed response slow and smooth at steady state.

A big set value will make the speed response quick and unsmooth at steady state.

※ Suitable for F147 = **4 : Sensorless V/F Scalar Control** or **6 : Sensorless Flux Vector Control** mode.

◯	F164	Slip Compensation Gain	10～200	%	100

◆ If the load to motor increases, the motor reduces its speed resulting in greater motor speed difference. The function of slip compensation gain is to overcome the speed slip due to load change of the motor so as to maintain a constant speed.

※ Suitable for F147 = **4 : Sensorless V/F Scalar Control** or **6 : Sensorless Flux Vector Control** mode

◆ The rated slip of motor can be computed from the following formula according to the numerical values in the motor nameplate:

Synchronous motor rotating speed = 60Hz(4P) × 30 = 1800rpm

Motor rated rotating speed = 1730rpm

Slip of rotating speed = 1800 – 1730 = 70rpm

※ LS800 Series default rated slip frequency is 3Hz

Slip Compensation = F164 × 3Hz

Example：Slip Compensation = 88% × 3Hz = 2.64Hz

※ F147 = 6：Sensorless flux vector control

Slip Compensation = Motor electric parameters (F156～F160) × F164

Speed PI Controller (ASR)

※ PI control: PI control is a combination of proportional control (P) and integral control (I) that can make an offset to thereof controlled set point according to the error value and time-derived variation.

R	Parameter	Description	Range	Unit	Ex-factory Setting
◯	F165	Scalar Speed Control P Gain	2～100	%	20
◯	F166	Scalar Speed Control I Gain	0.0～100.0	%	50.0

◎ The scalar speed PI control is to provide operation compensation for (F147) Control Mode = 3: Closed Loop V/F scalar Control operation.

◯	F167	Low-speed Sensorless Speed Control P Gain	2～100	%	50
◯	F168	Low-speed Sensorless Speed Control I Gain	0.0～100.0	%	50.0
◯	F169	High-speed Sensorless Speed Control P Gain	2～100	%	30
◯	F170	High-speed Sensorless Speed Control I Gain	0.0～100.0	%	30.0

◆ PI speed control: PI control is to make a response that control the speed according to the speed deviation and time-elapsed variation through the combination of (P) proportional control and (I) integral control.

◆ Suitable for the control mode of F147 = 5：Close-loop vector control and 6：Sensorless vector control.

Caution : The abovementioned parameter modulation is the PI-modulating parameter for speed. It directly affects the dynamic response speed and control precision of system. Under general condition, the user has no need to alter the ex-factory values.

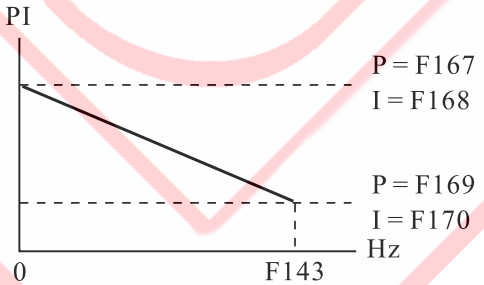

※ Please be cautious to the reaction from system simultaneously when modulating the parameters F167～F170.

※ **Prompt:**

(1) When you are using a motor with a high-efficiency, high-torque or a lower base frequency, a smaller set value of P gain shall be set to F167 and F169; otherwise , a bigger set value shall be used instead.

(2) If system needs a shorter acceleration/deceleration time, please set the F92 stall protection function to 0 together with an additional mounting of brake unit, or consider upgrading the capacity of frequency inverter for one level higher.

(3) PI parameters for speed control are closely related to the loading inertia and acceleration/deceleration time of motor system. The user can make adjustment based on the ex-factory PI parameters to go with different requirements of load characteristic in order to satisfy all kinds of need for different situation.

Magnetic Filed Oriented Control Block Chart

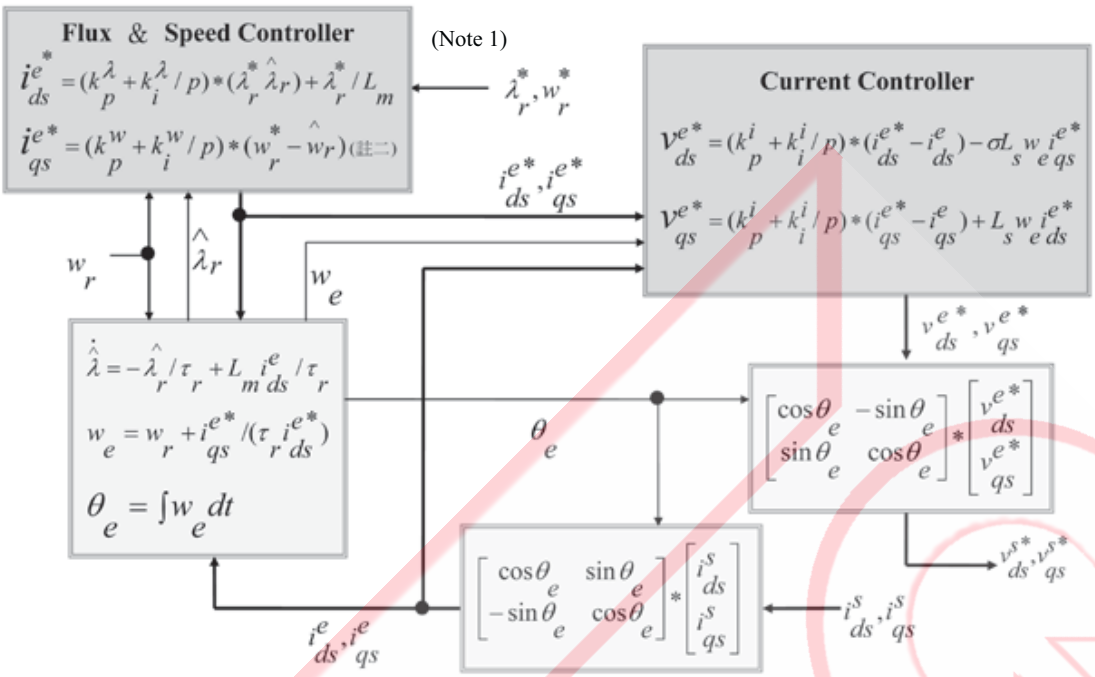

Note 1：The formula to solve magnetic field current is resident in the software and prevents from any alternation.

Note 2：The formula to solve speed PI is adjusted by F167 and F168.

PI Speed Control Parameters Mathematical Calculation Chart

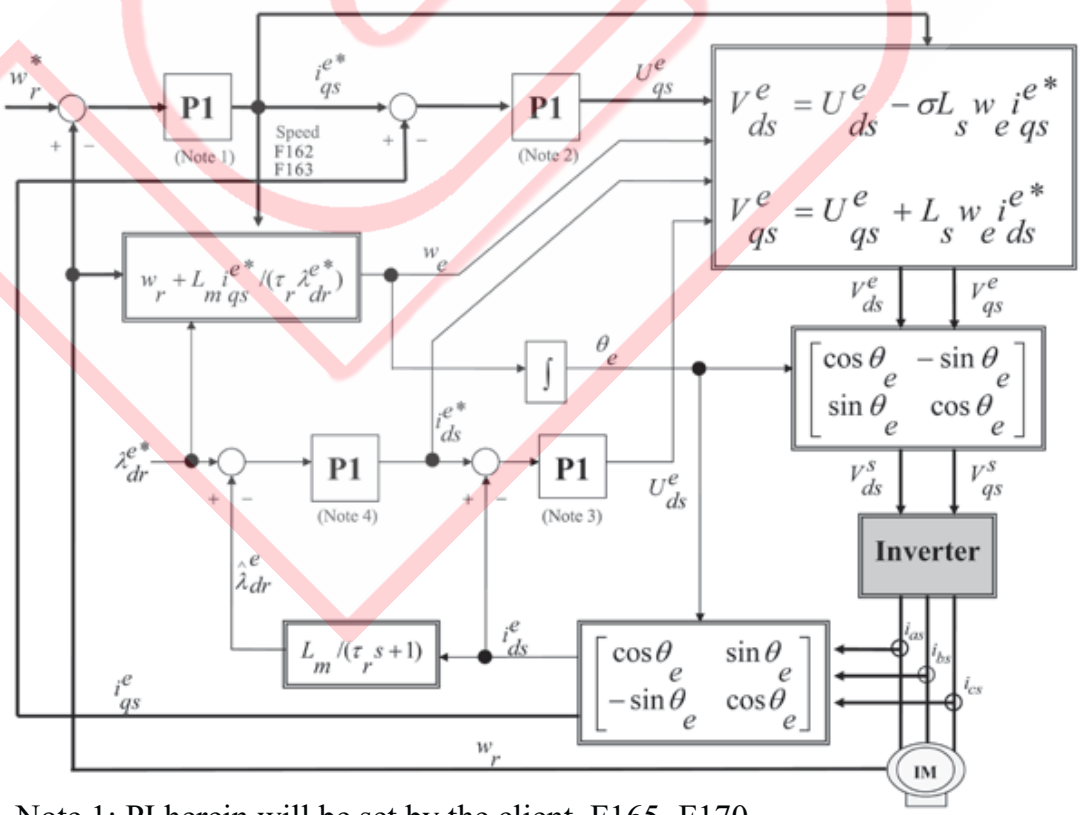

Note 1: PI herein will be set by the client, F165~F170.

Notes 2, 3, and 4: All resident in the software that prevent from any alternation.

R	Parameter	Description	Range	Unit	Ex-factory Setting
×	F171	Low-speed magnetic-field magnification factor	100.0～180.0	%	140.0
×	F172	Magnetic-field magnification cut-off frequency	0.00～0.60	Pu	0.20

◆ The F171 & F172 Torque compensation cut-off frequency sensor-less vector control mode function for F147= 5 Closed Loop Flux Vector Control and 6 : Sensorless Flux Vector Control is suitable for the equipment that needs high torque at low speed.

◆ Torque compensation is to take the no-load current of motor as the fiducial point while compensation cut-off frequency is to take the rated frequency of motor as the fiducial point.

Note: No-load current is the detected value from the detection & measurement of motor electric parameters.

Ex.: Motor no-load current = 3.0A,
motor rated frequency=60Hz,
F171=140%, F172=0.20
Computation formula: 3.0A x 140%= 4.2A
60 Hz × 0.20 = 12 Hz

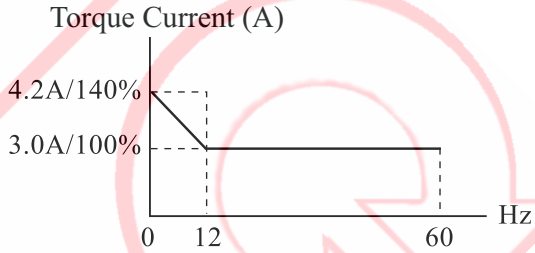

◯	F173	Torque Current Limit	0.000～1.250		1.000

◆ To set the torque current of the maximum load output from the AC drive.
Torque current =AC drive Rated Output Current (rms) x (F173) Torque Current Limit Setting. × 2
Ex.: 400V series 5HP ac drive, rated current 9.0A.
Torque Current Limit = 9.0 × 2 × 1.000 = 18.000

◆ Torque current limit is provided only for two types of control modes setup operation, F147 = 5 : Closed Loop Flux Vector Control, and 6 : Sensorless Flux Vector Control.

※ **Caution: The ac drive must match with the motor.**

×	F174	Torque Current analog control source selection	0～5		0

◆ To set up the option of torque control command input from the following four analog input signals and PID control torque, to take the analog signal 100% to correspond the set value of F173. （this function is only active under F147 = 5 Closed Loop Flux Vector Control mode, and 6: Sensorless Flux Vector Control.mode, Please refer to F50 ~ F64 for setting the analog parameters.）

■ **0 : Disabled**－ The analog torque control is disabled.

■ **1 : Digital Operator Panel AV**－ Linear torque control is done by the input signal voltage (DC 0~5V) from the digital operator AV.

■ **2 : AV1**－ The torque current set by F148 corresponding to input signal voltage (DC 0 ~ ±10V) from the external terminal AV1 is applied to perform the linear torque control.

■ **3 : AV2**－ The torque current set by F173 corresponding to input signal voltage (DC0~10V) from the external terminal AV2 is applied to perform the linear torque control.

■ **4 : AI**－ The torque current set by F173 corresponding to input signal current(4~20mA) or voltage (DC 0~10V) from the external terminal AI is applied to perform the linear torque control.

■ **5 : External PID**－ To perform torque PID feedback control. (Refer to PID Parameter Group F186-F200).

R	Parameter	Description	Range	Unit	Ex-factory Setting
×	F175	Torque Control Mode	0～1		0

■ **0 : Torque Current Limit**－ To follow the analog signals to perform torque current output limit.

■ **0 : Torque Current Command(Over-speed trip)**－ To follow the analog signals to perform torque current output control.

×	F176	Torque control over-speed tripping frequency	0.0～400.0	Hz	60.0

◆ When using the torque current command control with a load coefficient smaller than the torque current command value, the increase of speed frequency will go up unlimitedly; therefore, if there is a safety concern in this regard, please set an upper limit to F176 Torque Control over-speed tripping frequency so that the ac drive will trip at an error code Err 24 when output limit exceeds this upper limit.

Zero-speed positioning

×	F177	Closed loop vector control zero-speed positioning	0～2		0

■ **0 : Disabled**

■ **1 : Zero-speed positioning**－ When enabled this function, the internal control will lock the zero-speed that protect the rotor position of motor from drifting and rotating.

■ **2 : Pulse frequency command position tracking**－ To take the pulse number as the speed command and position control command; please set relevant parameters to F153 ~ F155 and set the F15 upper-limit frequency to a frequency above 115% of operating command frequency.

◯	F178	Zero-speed positioning P gain	2.00～100.00	%	30.00
◯	F179	Zero-speed positioning I gain	0.00～100.00	%	20.00

Abnormality Records

R	Parameter	Description	Range	Unit	Ex-factory Setting
×	F180	Latest Abnormality Record	0～60		0
×	F181	Last 1 abnormality Record	0～60		0
×	F182	Last 2 abnormality Records	0～60		0
×	F183	Last 3 abnormality Record	0～60		0
×	F184	No. of auto-reset	0～10		0

- ◆ When taken place an abnormal tripping phenomenon when ac drive is running, F184 will automatically reset to clear the abnormality (Auto-reset is disabled when set to 0); for safety concern if any, please cancel F184 Auto-reset function.
- ◆ The number of time of auto-reset is to be set up by the user; and when the number of abnormality exceeds the established number of time, pressing the RESET pushbutton from the digital operation panel for clearance is required; or set the digital input terminal 2 to: RESET CLEARANCE to reset to zero the number of time of auto-reset.
- ◆ A default time setting to reset the abnormality automatically is 6 seconds; for equipment with a larger mechanical inertia, please refer to F6 functions to enable a time-delay for activating the operation.
- ◆ For an abnormality taken place at standby state F xx.xx, F184 will not reset automatically, pressing RESET pushbutton for clearing the reset is required.
- ◆ When taken place an abnormality when operation control source is set to F4: 0 Digital operation panel, F184 will automatically reset and restart the operation.
- ◆ When taken place an abnormality when operation control source is set to F4: 1 Digital input terminal, F184 will automatically reset and operate under the current control mode.

×	F185	Abnormality Records Cleared	0～1		0

◎ Clear the Alarm trips stored in the memory.

■ **0 : Not Cleared.**

■ **1: Cleared.**

Err Code	Description of Alarm Report
Err 0	Digital operation panel communication failure
Err(U,A) 1	Over voltage (Err U1) or current (Err A1)in standby statu (Hardware detection protection)
Err(U,A) 2	Over voltage (Err U2) or current (Err A2)during acceleration (Hardware detection protection)
Err(U,A) 3	Over voltage (Err U3) or current (Err A3)during deceleration (Hardware detection protection)
Err(U,A) 4	Over voltage (Err U4) or current (Err A4)during speed regulation (Hardware detection protection)
Err 5	Heat sink overheated

Err Code	Description of Alarm Report
Err 6	Dc Bus over voltage
Err 7	Dc Bus low voltage
Err 8	Electronic thermal relay action (Motor overload)
Err 9	AC Drive voltage not matched to the motor voltage
Err 10	Software detected overload current protection
Err 11	AC Drive rated current range not matched to motor current
Err 12	Loss of output U-phase or U-phase C.T failure
Err 13	Loss of output V-phase or V-phase C.T failure
Err 14	Loss of output W-phase or W-phase C.T failure
Err 15	Reserved
Err 16	Encoder direction opposite to the phase sequence on the output side
Err 17	Encoder signal abnormalit
Err 18	Parameter detection failure
Err 19	Position-tracking error greater then 40 turns
Err 20	Overload (150%,60 sec)
Err 21	PG off-line detection
Err 22	Break wire detected analog signals AI
Err 23	Absence of speed feedback affecting performance of closed loop control
Err 24	Torque control overrides the F176 overspeed setting
Err 25	EEPROM parameter read back out of range
Err 26	Digital operation panel storage parameter write failure
Err 27	DSP storage parameter locked and preventing modification.
Err 28	Operator panel storage parameter locked and preventing modification
Err 29	External input abnormality
Err 30	3-phase current amplitude difference too big
Err 31	Current leakage or abnormal 3-phase current sum
Err 32	PUF fuse burnt out
Err 33	Power failure or too low mains input phase voltage
Err 35	Error in automatic operation time setup
Err 36	Digital input terminal setup repeated.
Err 15、 Err 34、 Err 37～Err 60	Are signals reserved for failure.

External PID

R	Parameter	Description	Range	Unit	Ex-factory Setting
×	F186	PI Target Value Input Options	0～4		0

- **0 : PID Disabled** — PID control not activated.
- **1 : PID Stop Setting Zero-in** — In PID control, the final PID control value is not memorised.
- **2 : PID Stop Setting Reserved** — In PID control, the final PID control value is memorised when the of operation command stops; when the operation command is reactivated, the memorised PID value acts as the initial PID value for control.
- **3 : DI enabled (PID Stop Setting Zero-in)** — With PID control activated by the multi-function input terminal, the final PID control value is not memorised when the operation command stops.
- **4 : DI enabled (PID Stop Setting Reserved)** — With PID control activated by the multi-function input terminal, the final PID control value is memorised when the operation command stops; when the operation command is reactivated, the memorised PID value acts as the initial value of PID for control.

×	F187	PI Target Value Input Options	0～8		0

◎ Input terminal is selected to function as the PID setpoint frequency command.

Setting	Function	Description of Function
0	PI initial value setup	PI setpoint command % value is directly set up by Parameter (F190).
1	AV1 Input	● External analog frequency command input terminal sets the setpoint value. ● Gain of analog frequency command is adjusted by Paramete F52～F66
2	AV2 Input	
3	AI Input	
4	Pulse Frequency Command Value	● Input of external setpoint value of pulse signal (option card PG- AB2) frequency command is set up by Parameters F148~F155.
5	Encoder (PG) feedback Value	
6	RAMP output	● S curve Output (Acceleration/Deceleration time curvature)
7	Total output current	$\hat{I}$ — Total $\hat{I}=\sqrt{i\varnothing^2 + iJ^2}$ — $i\varnothing$ = Excitation current, iJ = Torque current
8	Torque current	η

R	Parameter	Description	Range	Unit	Ex-factory Setting
×	F188	PI Feedback Input Options	0～8		0

◎ Input terminal is selected to function as the PID feedback detection source

Setting	Function	Description of Function
0	PI initial value setup	PI setpoint command % value is directly set up by Parameter (F190).
1	AV1 Input	● External analog frequency command input terminal sets the setpoint value. ● Gain of analog frequency command is adjusted by Paramete F52～F66
2	AV2 Input	
3	AI Input	
4	Pulse Frequency Command Value	● Input of external setpoint value of pulse signal (option card PG- AB2) frequency command is set up by Parameters F148~F155.
5	Encoder (PG) feedback Value	
6	RAMP output	● S curve Output (Acceleration/Deceleration time curvature)
7	Total output current	$\hat{I}$ Total $\hat{I}=\sqrt{i\varnothing^2 + iJ^2}$ $i\varnothing$ = Excitation current iJ = Torque current
8	Torque current	η

×	F189	D Input Options	0～8		0

◎ Input terminal is selected to function as the Derivative feedback input.

Setting	Function	Description of Function
0	PI Error	Error resulted from the PI setpoint and measured value sets the Derivative feedback input.
1	AV1 Input	● External analog frequency command input terminal sets the setpoint value. ● Gain of analog frequency command is adjusted by Paramete F52～F66
2	AV2 Input	
3	AI Input	
4	Pulse Frequency Command Value	● Input of external setpoint value of pulse signal (option card PG- AB2) frequency command is set up by Parameters F148~F155.
5	Encoder (PG) feedback Value	
6	RAMP output	● S curve Output (Acceleration/Deceleration time curvature)
7	Total output current	$\hat{I}$ Total $\hat{I}=\sqrt{i\varnothing^2 + iJ^2}$ $i\varnothing$ = Excitation current iJ = Torque current
8	Torque current	η

※ ATTENTION ! The feedback input type of F188 and F189 shall not be the same type used for the setpoint input of F187.

R	Parameter	Description	Range	Unit	Ex-factory Setting
◯	F190	PI Initial Value Setup	0.00～100.00	%	50.00

◎ This parameter sets up a fixed PI controller setpoint value or feedback value; however, both the setpoint source and the feedback source can not be set up with this function at the same time.

◯	F191	D input filtration time setup	0.05～10.00	Sec	0.20

◎ Derivative input is connected to a low pass filter to filter high frequency noise with the time constant τ＝F191/2.3

◯	F192	PID Output Limit	0.00～100.00	%	100.00

◎ This parameter is to be used for PID control with % as the unit of output limit, and the upper limit of PID control is 100%, the highest output frequency.

◯	F193	Unit 1 Kp Gain	2.00～300.00	%	100.00
◯	F194	Unit 1 Ki_H Gain	0.0～3000.0	%	400.0
◯	F195	Unit 1 Ki_L Gain	0.0～3000.0	%	200.0
◯	F196	Unit 1 Kd Gain	0.0～3000.0	%	20.0
◯	F197	Unit 2 1Kp Gain	2.00～300.00	%	100.00
◯	F198	Unit 2 Ki_H Gain	0.0～3000.0	%	5.0
◯	F199	Unit 2 Ki_L Gain	0.0～3000.0	%	5.0
◯	F200	Unit 2 Kd Gain	0.0～3000.0	%	5.0

Kp Control: The operation gain amounts to the proportional change of output.The response gets faster when a higher gain is entered, however, excessively large gain generates output instability.The response gets slower when a smaller gain is entered. Note: The gain of the KP control should not be entered as 0.

Ki Control: The operation gain amounts to integral change of output; the effective response is achieved by having the feedback value to be same as setpoint value. The response is faster when a higher integral gain is entered; however, excessive large gain will generate output instability.

Kd Control: The operation gain amounts to the rate of output changes; This gives a faster response to any sudden change. The output change will decay faster when a higher differential gain is entered; however, excessively large gain will generate output instability.

(1) There are two units of PID parameter settings available to perform switched operatio control by using the digital multi-function terminal inputs.

◎ The conversion between PID controller setpoint and feedback values is described as follows:

The speed command value set by F52~F66, the input analog voltage or current is divided by (F15) speed upper limit to give the % value.

For Example：F57 = 10%， F58 = 100%，F15 = 100.0Hz
(F187 or F188) = 2：AV2
voltage % = 100 × {(2/10) × (60/100 × 100) + (60/100 × 10)}/F15 = 18%

4~6 : % = 100 × (feedback speed/speed upper limit)

7~8 : % = 100 × (current/current when the current detector outputs 5V)

(2) Ki gains (Ki_L and Ki_H) at the zero-speed and the speed upper limit can be respectively set up. The settings will change proportionately according to the respective speed command changes. (Ki_L <= Ki_H)

(3) Kp gain setting corresponds to (F15) speed upper limit. Kp gain is automatically adjusted within the range of the speed upper limit according to change of multiplication of Ki gain.

(4) If the setting for the Ki_L is the same as that given to Ki_H, then both Kp gain and Ki gain will not vary according to the speed.

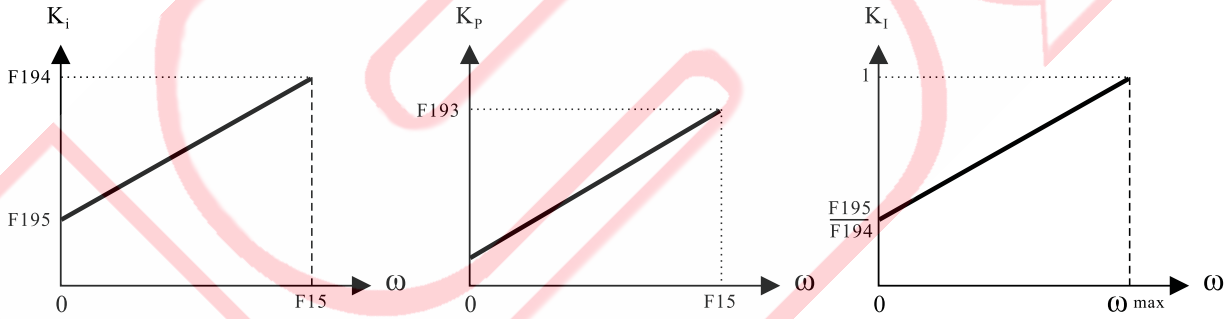

(5) Kd gain will not change according to speed command

(6) When PID output acts as the speed command, 100%=F15 (speed upper limit).

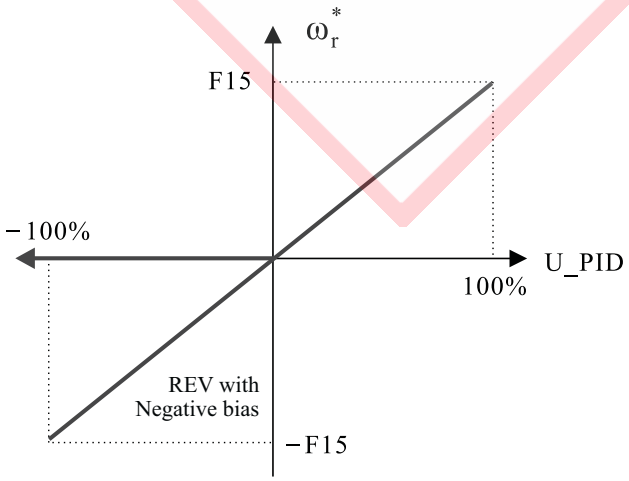

(7) When the PID output acts as the torque current limit, 100% = F173 (Limit current).

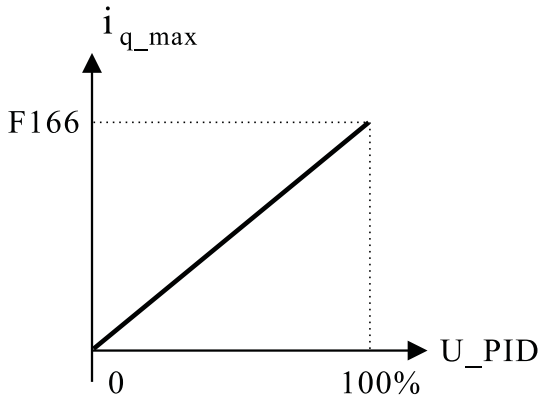

PID Control Block Chart：

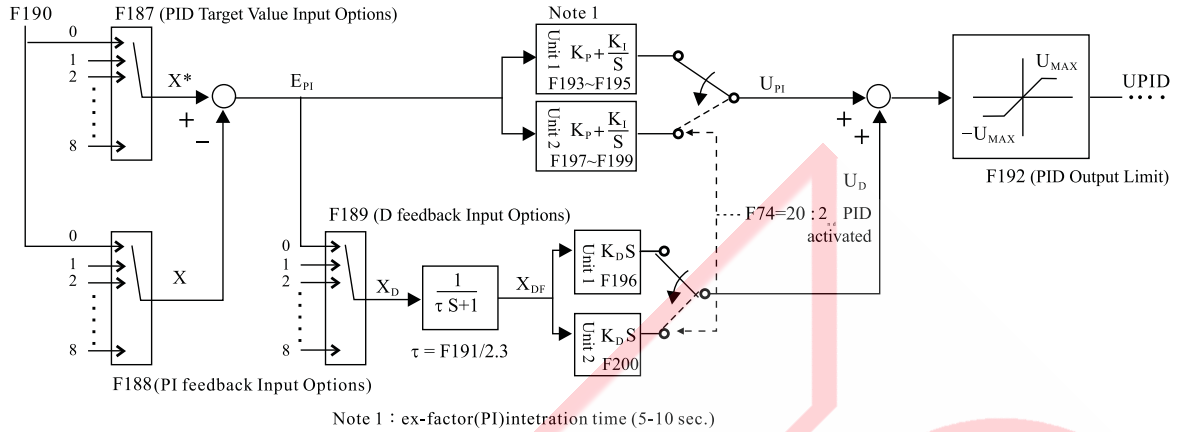

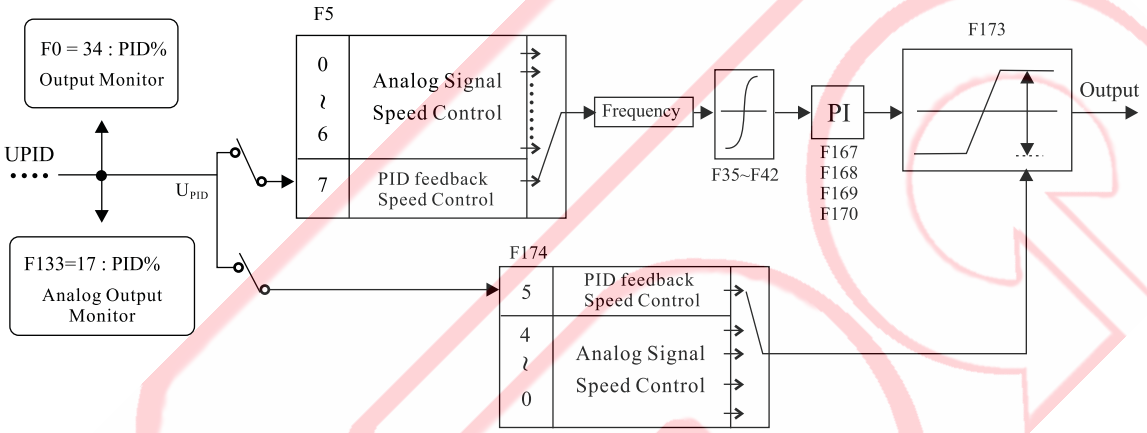

Special parameter setup

R	Parameter	Description	Range	Unit	Ex-factory Setting
×	F201	Set the minimum working pressure	1.0～20.0	%	2.0

An application parameter relevant to the Parameter F5：Speed command source and 8：AV2 + external PID control mode.

(1) Unless otherwise the pressure mode at minimum pressure is enabled at PID command value ＜ Parameter F201, and AV2 < 0.5 %, it is under general control mode.

(2) Under the general control mode：

(A) If PID command value ＜ Parameter F201, and AV2 ≧ 0.5 %, then it is in general control mode.

(B) When PID command value ≧ Parameter F201：

(a) Under general control mode：

If PID feedback value < PID command value, then it stays at general control mode.

If PID feedback value ≧PID command value, then it enters into PID control mode.

(b) Under PID control mode：

If PID command value ≧ Parameter F201, then it stays at PID control mode.

If PID command value ＜Parameter F201, then it ends the PID control mode.

No.2.31 Special-Purpose

R	Parameter	Description	Range	Unit	Ex-factory Setting
×	F202	Longest outage duration allowable	0～5000	ms	20

◆ If the power outage time is less than the allowable set value of time, it will follow the cycle of sequence to restart machine; otherwise, it will trip directly and display Err7 (DC voltage too low). During the low-voltage period, PWM output will be turned off and Lu warning will be displayed at the same time.

※ Current vector control mode is not suitable for the function to follow the cycle of sequence to restart machine after power restoration from power outage.

Communication setup

×	F203	AC Drive Comm. Address	1～255		1

◆ The address range of the ac drive communication falls between 1 ~ 255, representing the address of the ac drive in the communication network. The remote controller (PC or PLC) must be given remote control of the communication address set for each ac drive. (Note 1)

Note1: No AC drive shall have the same communication address within the same communication network.

×	F204	PC Transmission Rate	0～4		2

2400 Bps transmits 2400 / 8 = 300 bytes per second.
The type of transmission cable and its length affect the transmission rate. In the case of longer cable being used, the cable with slower transmission rate is preferred to compensate for a higher transmission quality and stability. If faster response speed is expected from the ac drive, adjust for higher transmission rate or adjust(F206) ac drive response time.

0：2400　　1：4800　　2：9600　　3：19200　　4：38400

×	F205	PC Communication Data Format	0～3		0

- 0：8,N,1 RTU (1 start bit ＋ 8 data bits ＋ 1 stop bit)
- 1：8,E,1 RTU (1 start bit ＋ 8 data bits ＋ 1 Even bit ＋ 1 stop bit)
- 2：8,0,1 RTU (1 start bit ＋ 8 data bits ＋ 1 Odd bit ＋ 1 stop bit)
- 3：8,N,2 RTU (1 start bit ＋ 8 data bits ＋ 2 stop bits)

×	F206	Response time of frequency inverter	3～50	ms	5

※ The response time of the ac drive is the delay time between the time the ac drive receives command signal from the remote controller and the time the it sends its response signal. The time between the response time of the remote controller from one transmitted package to the next may vary, If the response time of the acdrive is too short and not matching to the response time of the remote controller, the response signal may get overlapped with the command signal in the communication network. Therefore, the response time for the ac drive must be set to that of the remote controller.

×	F207	Receive Failure Response	0～7		0

- **0 : Normal Receiving**
- **1 : Function Code Error**
- **2 : CRCL Error**
- **3 : CRCH Error**
- **4: Packet-receiving time exceeds 0.2 second**
- **5: Informally alter the parameters during the operation**
- **6：Parametric value out of range**
- **7：Parameter code error**

II. Use instruction of computer communication software

Setup of communication parameters for ac drive and switch changeover method of hardware

(The digital operation panel is required to perform the following setups)

1. When applying the computer software for communication, the communication parameters (F203 ~ F206) shall be established first by digital operation panel.
2. Setup of parameters: F203: communication address of ac drive, F204: PC transmission rate, F205: communication data format, F206: response time of ac drive, etc. Please select the required communication rate and data format corresponding to the PC in order to access a normal linking for communication.
3. After finishing the setup of parameters for software, please disengage the digital operation panel from ac drive, and set the 1st, 2nd and 3rd pins ON from the SW1 in the motherboard of ac drive. (Please refer to P2-10 in Application Manual).

Connection of hardware

1. For PC serial communication ports (COM.PORT), route it to RS485 device with a RS232, and then connect the signal line to the SG+ and SG-, two terminals at the terminal block of AC drive.
2. For PC Universal Serial Bus, route the USB to the RS485 signal converter, and then connect the signal line to the SG+ and SG-, two terminals at the terminal block of AC drive.

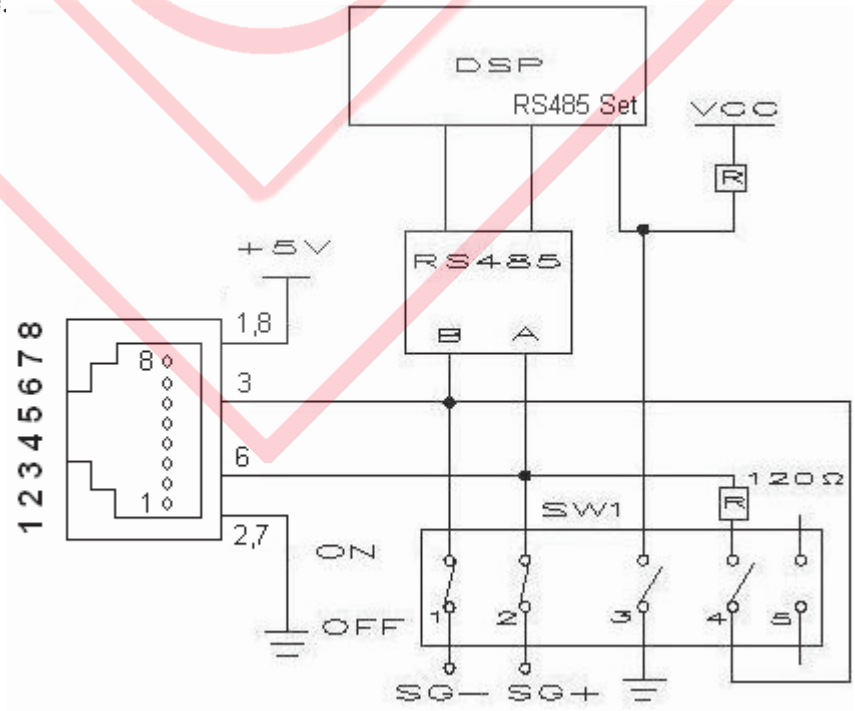

- Set SW1 Pin3-ON for RS485 MODBUS communication format and pin3-OFF for RS485 digital operation panel format.
- Pin4 of SW1 is a terminal resistance for RS485 communication (120R).

MODBUS Communication

LS800 series:

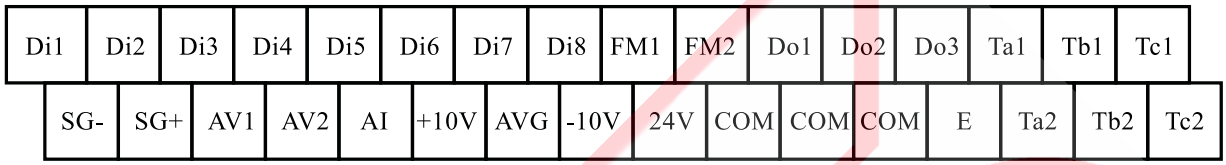

※ The RS-485 is the internally exclusive communication format for digital operation panel(Note 1); and a different communication format shall be applied to the external (SG-、SG+) MODBUS communication monitoring(Note 2); do not connect them at the same time for operation; only single format is allowed to be enabled.

Note 1: The internally used signals are signals for digital operation panel to perform the operation and control.

Note 2: The externally used signals are signals to perform the external monitoring that are input from the signal terminal SG-, SG+ of RS485 Modbus to the terminal block; the sources are PLC and Computer, etc.

Please refer to P2-10 for description of relevant setup.

◆ Communication procedures between RS485 MODBUS and PLC

(1) When selected the RS485 communication method to carry out the monitoring and control of ac drive, for the first thing, the digital operation panel shall be taken to establish the parameters of communication mode (F203 ~ F207).

F203：Communication address of ac drive (1~255)

Caution : The legal communication addresses are ranging from 1 to 255;if the communication address is set to 0, it means to perform a broadcasting to all motor actuator. Under such a mode, the motor actuator will not respond any message to the master device.

F204：PC transfer rate (0~4)

0：2400、1：4800、2：9600、3：19200、4：38400

F205：Communication data format (0~3)

0 : (8 , N , 1) RTU (1 Start bit + 8 data bits + 1 stop bit)

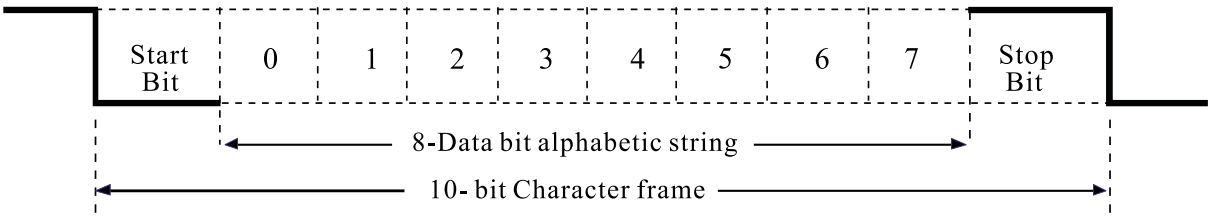

1 : (8 , E , 1) RTU (1 Start bit + 8 data bits + 1 Even bit + 1 stop bit)

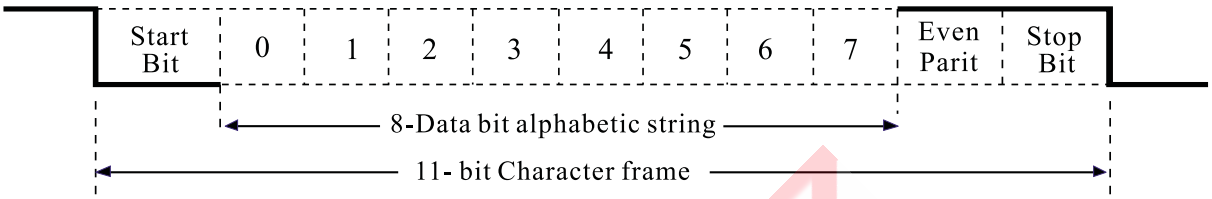

2 : (8 , 0 , 1) RTU (1 Start bit + 8 data bits + 1 Odd bit + 1 stop bit)

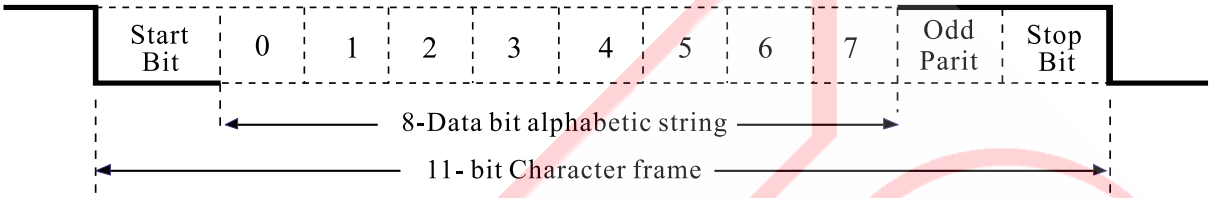

3 : (8 , N , 2) RTU (1 Start bit + 8 data bits + 2 stop bit)

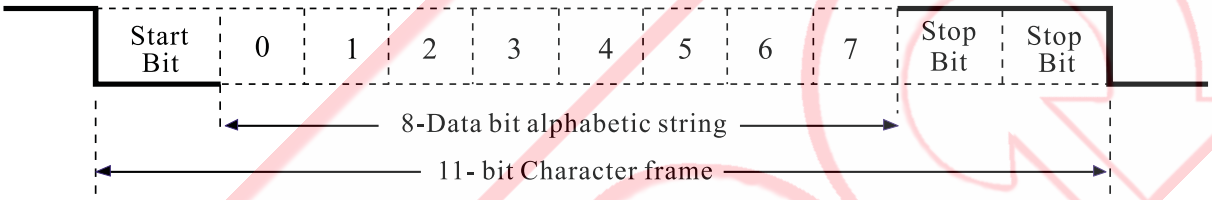

F206: Responding time of ac drive (3~50ms)

(1) When taking the RS485 MODBUS communication to control the ac drive is desired, please set up the F4-Operation control source to 0：Digital operation and the F5-Frequency command source to 1: Digital operation. The rest of mode setups are for operation-monitoring functions. (Digital operation panel is configured in digital data format).

(2) Please disengage the digital operation panel and the ac drive; and set the SW1 functional dip switch NO.3 (OFF) from the motherboard for internal communication and set NO.1 (ON), NO.2 (ON), NO.3 (ON) for external communication.

(3) When communication has no response, just read the receiving failure code (F207) to find out the causes.

- **0 : Receiving normal**
- **1 : Function code error**
- **2 : CRCL error**
- **3 : CRCH error**
- **4 : Packet-receiving time exceeds 0.2 second**
- **5 : Informally alter the parameters during the operation**
- **6 : Set Parameter value out of range**
- **7 : Parameter code error**

(4) Communication data structure (the data contents are 16-bit numbered format)

i. Keep the no-input-signal state >= 10ms
ii. communication address
iii. functional code
iv. Parameter code Content (H)
v. Parameter code Content (L)
vi. Set value Content (H)
vii. Set value Content (L)
viii. Check code(CRCL)
ix. Check code (CRCH)
x. Keep the no-input-signal state >= 10ms

(5) Function code :

03H：To read the parameters set to and displayed by ac drive
06H：To write in the operation parameters of ac drive and set up parameters
08H：Loop detection

1. To read the parameters set to AC drive (D2=03H, D3=00H)

A. PC calls：	B. ac drive responds：
D1: Communication address (00~FFh) D2: function code (03h) D3: # th set parameter (H) (00h) D4: # th set parameter (L) (0~D2h) D5: Number of data entry (H) (00) D6: Number of data entry (L) (0nh) D7: CRCL D8: CRCH	D1: Communication address (00~FFh) D2: function code (03h) D2: Number of byte for parameter content 2*(0n) D3: Content of set parameter 1(H) (00~FFh) D4: Content of set parameter 1(L) (00~FFh) …….. …….. Dm-3: Content of set parameter n(H) (00~FFh) Dm-2: Content of set parameter n(L) (00~FFh) Dm-1: CRCL Dm: CRCH
※Number of data entry n = 1~12	**※ m = 5 + 2 * n**

Ex.：To read the set values of parameters from the ac drive (F17 Note 1, F18)
Responding data：F17=60.00Hz、F18=5.00Hz Note 2

※ Note 1：F17=0011h，Number of data entry: 2 entries
Note 2：Responding data will be displayed without decimal points, so
60.00Hz=6000=1770h，5.00Hz=500=01F4h

Calling commands at PC side are as follows:		Responding data from ac drive are as follows:	
Communication address	01h	Communication address	01h
function code	03h	function code	03h
17th set parameter (H)	00h	Number of data entry	04h
17th set parameter (L)	11h	Contents of F17 parameter (H)	17h
Number of data entry (H)	00h	Contents of F17 parameter (L)	70h
Number of data entry (L)	02h	Contents of F17 parameter (H)	01h
		Contents of F17 parameter (L)	F4h
CRCL	64h	CRCL	FEh
CRCH	0Eh	CRCH	4Bh

2.To the parameters displayed by AC drive (D2=03H, D3=21H)

A. PC calls:	B. ac drive responds:
D1: Communication address (00~FFh)	D1: Communication address (00~FFh)
D2: function code (03h)	D2: function code (03h)
D3: #th displayed parameter (H) (21h)	D2: Number of byte for parameter content 2*(0n)
D4: #th displayed parameter (L) (00~25h)	D3: content of displayed parameter 1(H) (00~FFh)
D5: Number of data entry (H) (00)	D4: content of displayed parameter 1(L) (00~FFh)
D6: Number of data entry (L) (0nh)	……..
D7: CRCL	……..
D8: CRCH	Dm-3: content of displayed parameter n(H) (00~FFh)
	Dm-2: content of displayed parameter n(L) (00~FFh)
	Dm-1: CRCL
	Dm: CRCH
※ Number of data entry n =1 ~ 12	**※ m = 5 + 2 * n**

2100h : Frequency Command	2101h : Output Frequency	2102h : Output current (rms)	2103h : Output voltage(rms)
2104h : PG feedback rpm	2105h : Pulse frequency command	2106h : Sensorless Vector Output Speed	2107h : Output power supply frequenc
2108h : unitless	2109h : Slip Frequency	210ah : Vdc(V)	210bh : Excitation voltage
210ch : Torque voltage	210dh : Excitation Current command	210eh : Torque current command	210fh : Excitation Current
2110h : Torque current	2111h : Output Power	2112h : True Power	2113h : Reactive Power
2114h : Temperature (C)	2115h : Count value	2116h : Digital input status	2117h : Relay and DO status
2118h : AV(%);	2119h : AV1(%)	211ah : AV2(%)	211bh : AI(%)
211ch : Vdc_0V	211dh : Cycle No. & Multi-stage No.	211eh : K_Vdc	211fh : Phase U current (rms)
2120h : Phase V current (rms)	2121h : Phase W current (rms)	2122h : PID(%)	2123h : ERR
2124h : Software version	2125h : Position-tracking error		

2116h: Di8 Di7 Di6 Di5 Di4 Di3 Di2 Di1; 2117h: BK Do1 Do2 Do3 Relay1 Relay2;
211dh: # # # Cycle. # # piece

Ex. : To read the indicating values from the operation of ac drive (2101h, Note 1, output frequency) (Responding data : 60.00 Hz Note 2)

※Note 1：2101h=8449, Number of data entry: 1 entries
Note 2：Responding data will be displayed without decimal points, so 60.00Hz=6000=1770h

Calling commands at PC side are as follows:		Responding data from ac drive are as follows:	
Communication address	01h	Communication address	01h
Function code	03h	function code	03h
Read the indicating parameter (H)	21h	Number of data entry	02h
Read the indicating parameter (L)	01h	Operation-indicating value (H)	17h
Number of data entry (H)	00h	Operation-indicating value (L)	70h
Number of data entry (L)	01h	……	
CRCL	DFh	CRCL	B6h
CRCH	F6h	CRCH	50h

Response-display parameters :	Data format in expression	Response-display parameters :	Data format in expression
0 : Frequency command (F)	xxx.x(Hz) or xxxxx(Rpm)	19 : Reactive Power (%)	xxx.x
1 : Output Frequency (H)	xxx.x(Hz) or xxxxx(Rpm)	20 : Temperature (°C)	xxx
2 : Output current (A)	xxx.x	21 : Count value	xxxxx
3 : Output voltage (E)	xxx.x	22 : Digital input status	Di8 Di7 Di6 Di5 Di4 Di3 Di2 Di1
4 : PG feedback rpm (n)	xxx.x(Hz) or xxxxx(Rpm)	23 : Digital output status	BK Do1 Do2 Do3 Relay1 Relay2
5 : Pulse frequency command	xxx.x(Hz) or xxxxx(Rpm)	24 : Digital operation AV (%)	xxx.x
6 : Sensorless Vector Output Speed	xxx.x(Hz) or xxxxx(Rpm)	25 : AV1(%)	xxx.x
7 : Output power supply frequency	xxx.x(Hz) or xxxxx(Rpm)	26 : AV2(%)	xxx.x
8 : unitless	xxxx.x	27 : AI(%)	xxx.x
9 : Slip Frequency	xxx.x(Hz) or xxxxx(Rpm)	28 : Vdc_0	xxxx
10 : Vdc(V)	xxx	29 : Cycle No. & multi-stage No.	# # # #Cycle. # #speed
11 : Excitation voltage	xxx.x	30 : K_Vdc	xxxx
12 : Torque voltage	xxx.x	31 : Phase U current (rms)	xxx.x
13 : Excitation Current command	xxx.x	32 : Phase V current (rms)	xxx.x
14 : Torque current command	xxx.x	33 : Phase W current (rms)	xxx.x
15 : Excitation Current	xxx.x	34 : PID(%)	xxxx
16 : Torque current	xxx.x	36 : Software version	x.xx
17 : Output Power (%)	xxx.x	37 : Position-tracking error	xx
18 : True Power (%)	xxx.x	35, 38~40 : Reserved	

3.To write in the operation parameters of AC drive (D2=06H, D3=20H)

A. PC calls:	B. AC drive responds:
D1: Communication address (0~FEh)	D1: Communication address (00~FFh)
D2: function code (06h)	D2: function code (06h)
D3: #th operating parameter (H) (20h)	D3: #th operating parameter (H) (20h)
D4: #th operating parameter (L) (00~00h)	D4: #th operating parameter (L) (00~D1h)
D5: Write-in content of parameter (H) (00~FFh)	D5: Write-in content of parameter (H) (00~FFh)
D6: Write-in content of parameter (L) (00~FFh)	D6: Write-in content of parameter (L) (00~FFh)
D7: CRCL	D7: CRCL
D8: CRCH	D8: CRCH
2000h(Operation control) : 0: Stop 1: FWD 2 :REV 3: Inching FWD 4:Inching REV 5: Failure reset	

4.To write in the set parameters of ac drive (D2=06H, D3=00H)

A. PC calls:	B. AC drive responds:
D1: Communication address (00~FFh)	D1: Communication address (00~FFh)
D2: function code (06h)	D2: function code (06h)
D3: #th set parameter (H) (00h)	D3: #th set parameter (H) (00h)
D4: #th set parameter(L) (00~D2h)	D4: #th set parameter(L) (00~D2h)
D5: Write-in content of parameter (H) (00~FFh)	D5: Write-in content of parameter(H) (00~FFh)
D6: Write-in content of parameter (L) (00~FFh)	D6: Write-in content of parameter(L) (00~FFh)
D7: CRCL	D7: CRCL
D8: CRCH	D8: CRCH
Only the speed command setups can be changeable during operation: F17~ F25.	

Ex. : ① Writing to enable the AC drive to perform setup in 50.00Hz

② Writing to enable the AC drive to perform the running command 2000h: 1 FWD running

※ Note 1：F17=0011h, 50.00Hz=5000=1388h

Note 2：Running command=2000h=8192, FWD rotation=0001h

Calling commands at PC side are as follows:	① 50HZ	② FWD running	Responding data from ac drive are as follows:	① 50HZ	② FWD running
Communication address	01h	01h	Communication address	01h	01h
Function code	06h	06h	Function code	06h	06h
17th set parameter (H)	00h	20h	17th set parameter (H)	00h	20h
17th set parameter (L)	11h	00h	17th set parameter (L)	11h	00h
Data content (H)	13h	00h	Content of set Data (H)	13h	00h
Data content (L)	88h	01h	Content of set Data (L)	88h	01h
CRCL	24h	43h	CRCL	24h	43h
CRCH	99h	CAh	CRCH	99h	CAh

5. Loop detection (D2=08H)

08H : Loop detection	
A. PC calls D1: Communication address (00~FFh) D2: function code (08h) D3: Test content of parameter (1) (00~FFh) D4: Test content of parameter (2) (00~FFh) D5: Test content of parameter (3) (00~FFh) D6: Test content of parameter (4) (00~FFh) D7: CRCL D8: CRCH	B. ac drive responds: D1: Communication address (00~FFh) D2: function code (08h) D3: Test content of parameter (1) (00~FFh) D4: Test content of parameter (2) (00~FFh) D5: Test content of parameter (3) (00~FFh) D6: Test content of parameter (4) (00~FFh) D7: CRCL D8: CRCH

Ex. : Loop testing commands

Calling commands at PC side are as follows:		Responding data from ac drive are as follows:	
Communication address	01h	Communication address	01h
function code	08h	function code	08h
Test content of parameter (1)	01h	Test content of parameter (1)	01h
Test content of parameter (2)	02h	Test content of parameter (2)	02h
Test content of parameter (3)	03h	Test content of parameter (3)	03h
Test content of parameter (4)	04h	Test content of parameter (4)	04h
CRCL	41h	CRCL	41h
CRCH	04h	CRCH	04h

CRC production steps :

1. CRC = 0FFFFh
2. CRC = (CRC) XOR (DATA1)
3. Determine if CRC's BIT0 is 1 ?
   Yes：CRC = (CRC >>1) XOR (0A001h)
   No：CRC = CRC >> 1
   ※ >>1 ：right-shift for one digit, input 0 to higher bits.
4. Again, repeat the step 3 for 7 times (that is, the step 3 shall be executed 8 times in total)
5. Download the data of next entry DATA2
6. Repeat steps 2~4
7. Repeat steps 5 and 6 until all the data have been executed.

Storage, Recalling Parameters

R	Parameter	Description	Range	Unit	Ex-factory Setting
×	F208	Recall Parameter	0～2		0

■ **0 : Not Recalled.**

■ **1 : Recall Ex-factory Setup** — Recall the ex-factory setting (F129, F130, F141~F146, F156~F161 are not affected).

■ **2: Recall Parameter Settings Saved in Digital Operation Panel** — Recall the parameter settings saved in the digital operator.

×	F209	Copy & save the parameter in digital operation panel	0～1		0

■ **0 : Not Saved.**

■ **1 : Saved in Digital Operation panel** — to save the modified parameter settings into the digital operator.

※ **ATTENTION 1 — Each digital operator is provided with an EEPROM to maintain records without any externally power supply. The memory capacity for each EEPROM covers to all parameter settings of one unit of ac drive, and may be used to save another set of parameter settings from another ac drive, or acts as the backup for storage and parameter duplication. The duplication of the parameter settings may be done through Parameter F208: (2) Recall Parameter Settings Saved in Digital Operator. The recalled parameter settings from the digital operator is recalled to the RAM of the DSP; and then saved**

※ **ATTENTION 2 — Parameter duplication function is only applicable to duplicate the parameters from multiple ac drives under the conditions they are of the same voltage grade, capacity and same control mode.**

×	F210	Lock up EEPROM Parameters	0～1		0

■ **0 : Save modified** — to modified all parameter settings into the EEPROM.

■ **1 : Lock up Parameters** — This function is able to lock most of the contents of parameters; the contents are unchangeable and for display only.

※ **Parameters F0, F17 are exempted from this restriction of locking the functional parameters.**

VI

PROTECTION & TROUBLESHOOTING

- Abnormality Diagnosis.....6-1
- Most Frequently Used Troubleshooting...6-5

Abnormality Diagnosis

◆ This Chapter describes the display of abnormality found with the ac drive and coping measures, as well as the troubleshooting in case of any abnormality found with the motor.

＜Table＞Abnormality Display & Coping Measures

Display	Description	Cause	Coping Measures
Err 1	Over voltage (U1) or current (A1) in standby status	● Excessively high voltage at input(R. S.T) source resulting in that the voltage on the DC side is over the voltage detected level. ● Possible shortage between phases or shortage to the grounding of the output cable.	● Drop the voltage to fall within the range of power source specification. ● Check the output cable and remove any shortage when confirmed.
Err 2	Over voltage (U2) or current (A2) in acceleration	● If the activation is done while the motor is idling (that could easily lead to over voltage or over current) ● If acceleration time too short (that easily leads to over current). ● Electrical leakage caused by bad motor insulation	● Set F6=2: DC Brake, then leave it to be started by activation frequency. ● Allow longer acceleration time. Check & repair the motor or replace it with new one
Err 3	Over voltage (U3) or current (A3) in deceleration	● If deceleration time too short (that easily leads to over voltage or over current).	● Allow longer deceleration time (set the deceleration time that meets GD^2)
Err 4	Over voltage (U4) or current (A4) in speed regulation	● If the motor is drawn by external force. ● If load undergoes drastic change.	● Improve system to expel external source. ● Change the load to be smoother.
Err 5	Heat sink overheated	● If temperature of heat sink of the ac drive is over the F100 setting. ● If cooling fans operate normality ● If ambient temperature gets too high	● Check F100 setting ● Replace the cooling fan. ● Increase air ventilation volume.
Err 6	DC Bus over voltage	● If input source (R.S.T) voltage higher than DC protection level (AC in× 1.414×130%) or F129 setting error. ● Short deceleration time, and large regenerated source from motor ● Over Voltage protection point (O.V)： 200V：400Vdc 400V：800Vdc	● Reduce source voltage ● Check F129 setting. ● Extend deceleration time or connect to the brake resistance(or brake unit).
Err 7	DC Bus low voltage	● Transient power interruption resulting in voltage stages below DC protection level .(AC in×1.414×70％) ● Phase insufficiency in input power or loosening wiring terminal. ● Input power supply voltage variation is to large ● Parameter F129 setting error ● Low-voltage protection point (L.V) 200V：180Vdc 400V：380Vdc	● Check to identify the cause and improve power source quality.

＜Table＞Abnormality Display & Coping Measures

Display	Description	Cause	Coping Measures
Err 8	Electronic thermal relay action (Motor overload)	● Motor load current is greater than the built-in electronic thermo-sensitive setting(F95,F96 and F142)	● Improve the load to motor and check for correct parameters (F95, F96 and F142). ● Slightly increase the F95 thermal relay initiation of position.
Err 9	AC drive voltage not match the motor voltage	● F141 motor rated voltage not be less than 1.5X of the input voltage of the ac drive. (F129)	● Change the motor voltage grade and check parameters F129, F141.
Err 10	Software-detected overload current protection	● Peak amperage of U.V.W on the output side of the driver greater than 2.8X of the rated amperage. ● If acceleration time too short ● If impact amperage for operation gets too large	● Check for normal operation of motor & mechanical system ● Check the setting of acceleration time parameter ● Replace with a driver of larger capacity
Err 11	AC drive rated current range not match motor current	● F142 motor rated current not be less than 9X of the rated current of the ac drive.	● Change motor capacity, and check the setting of parameter F142)(small motor capacity prevents control and protection.)
Err 12	Loss of output U-phase or U-phase C.T failure	● Phase wire of U.V.W on output side of the ac drive and motor wiring not secured or open ● failure to internal current sensor (C.T)	● Check the wiring loops before restoration of power. ● Return to the genuine maker of service.
Err 13	Loss of output V-phase or V-phase C.T failure		
Err 14	Loss of output W-phase or W-phase C.T failure		
Err 16	Encoder direction opposite to the phase sequence on the output side	● PG revolution direction is opposite to that of the motor operation	● Switch between PG Phase A and B or change the settings of Parameter F150.
Err 17	Encoder signal (PG) abnormality	● PG wiring error ● PG pulse number (F149) setting error ● Wrong power supply to PG	● Check the PG wiring. ● Check the parameter settings. ● Supply correct power source
Err 18	Parameter detection failure	● Motor electric parameter auto-tuning failure。	● Check for correct settings of Parameters F141~F146 ● Manually operate motor data and input results into motor electric parameter group (F156~F160). Refer to P5-43
Err 19	Position-tracking error greater than 40 turns	● Too big rpm deviation or overload ● Maybe acceleration / deceleration time too short	● Lighten the motor load, verify the mechanical system. ● Extend the acceleration/ deceleration time.

＜Table＞Abnormality Display & Coping Measures

Display	Description	Cause	Coping Measures
Err 20	Overload (150%,60 Sec.)	● Short-circuit or grounding taken place at output side of ac drive (Contacted or grounded due to motor burnt out, aged insulation, broken wires, etc.) ● Ac drive loaded a current in excess of rated current by 150% for 60 seconds. ● Applied a special motor, or a motor in excess of the maximum suitable capacity. ● Output side of ac drive is override by the on-off of solenoid valve.	● Check the cause, take remedy actions and restore power.
Err 21	PG off-line detection	● Broken wire of PG wiring.	● Fix and inspect the wire-broken place
Err 22	Break wire detected analog signals AI	● AI input current signals break ● Whether application parameter F65 set an error (setting 1).	● Check the wiring circuit ● Check the parameter F65
Err 23	Absence of speed feedback affecting performance of closed loop control	● Absence of setting up parameter F148 speed feedback at 1: Encoder PG.	● Set up Parameter F148
Err 24	Torque control over upper limit of speed	● Overshooting occurred ● Command speed too high ● Inappropriate F176 set value	● Readjust the gain ● Recheck the commanding circuit and commanding gain ● Confirm F176 set value
Err 25	EEPROM parameter read back out of range	● Failure in EEPROM, no data available, storage incomplete, or parameter setting out of range.	● Use the function of Parameter F208=1: Recall Ex-factory setting before setting up the motor nameplate parameter group, or check one by one the parameter settings for any challenge of the range. ● If the step aforesaid fails, return it to genuine maker for service.
Err 26	Digital Operation panel storage parameter write failure	● Operator extension too long or subject to noise interference. ● Operator memory failure.	● Improve wiring quality and length. ● Replace the operator & run the test again.
Err 27	DSP storage parameter locked and preventing modification	● Parameter storage is restricted to prevent from saving new data.	● If required, save the new parameter, and set Parameter F210=0: Save Allowed.
Err 28	Operator panel storage parameter locked and preventing modification	● The parameter storage of the digital operator has been restricted	● Select Parameter F210=0: Save Allowed

＜Table＞Abnormality Display & Coping Measures

Display	Description	Cause	Coping Measures
Err 29	External input abnormality	● External abnormality signals are inputted from the multi-function input terminal (Di3~Di8).	● Remove the cause of external abnormality.
Err 31	Current leakage or abnormal 3-phase current sum	● Poor wiring or poor motor insulation.	● Check the output (U.V.W)wiring and insulation for damage. ● Check if the setting for Parameter F98 is too small.
Err 32	PUF fuse burnt	● Inverter output to motor by a wire short or motor leakage,caused damage to the fuse.	● Check the cause and take coping measures before replacing the ac drive.
Err 33	Power failure or too low mains input phase voltage	● Poor conduction of the breaker or EMI contact. ● Loosening input power wiring terminal ● Drastic changes in the input power voltage	● Check the cause and take coping measures before restoring the power.
Err 35	Error in automatic operation time setup.	● All the automatic operation for 16 stages of speed are set at 0 (there is no operation time to be executed).	● Check the settings of Parameters F105~F120.
Err 36	Digital input terminal setup repeated.	● The same function is given repeated set by the multi-function input terminal Di3~Di8 (with the exception of 0: Disabled).	● Check the settings of Parameters F69~F74.

Most Frequently Used Troubleshooting

INHIBIT

(Troubleshooting listed below can only be done by qualified technician or dedicated keeper of this machine. The manufacturer of this machine will not be liable for any failure of this machine due to failure to observe this statement.)

The motor just won't run?

Symptom : The motor fails to operate

§ **Check to see if the source has been delivered to the R.S.T source terminals?**

→ Turn on the power source

→ Disconnect the power supply and re-energize it.

§ **Check to see if there is the voltage output from output terminals U.V.W?**

→ Confirm the power source.

→ Follow the operation procedure to operate it.

§ **Check to see if the motor shaft is deadlocked?**

→ Ease off the load to the motor

→ Replace the motor

→ Check the mechanical construction

§ **Wrong wiring ?**

→ Examine and repair the wiring loops.

§ **Protection functions enabled ?**

→ Verify the displayed content in monitor.

§ **Incorrect setting to the operation keyboard ?**

→ Reconfirm the operation procedure

AC drive trips when starting the motor?

Symptom: An error code Err2 appears when starting or accelerating the motor (it may caused by the enabled protection function of over-current, or a momentary output current in excess of 200% of rated current, or a damaged IGBT module).

§ **If the torque is insufficient upon activation of heavy load?**

→ Change the setting of torque compensation

§ **If the acceleration time is too short to match the GD^2 of the load?**

→ Extend the acceleration time

§ **Starting frequency too low?**

→ Increase the starting frequency

§ **Protection function enabled?**

→ Confirm what is displayed on the monitor.

§ **AC drive started when motor is idling?**

→ To set the function of reactivation in the course of idling.

§ **Incorrect setting to operation keyboard? electric leakage due to defective motor insulation?**

→ Reconfirm

→ Replace with a good motor, or remove the output wires before feeding to activate; if trip insists Err2, it indicates failure of the ac drive; if not, the failure of the motor.

The ac drive trips when the motor is decelerating?

Symptom: Err 6 displays in the course of deceleration (over voltage protection function operates).

§ **The integral brake loop inside the ac drive failed to absorb the regenerative energy from motor during a sharp deceleration when the GD_2 of motor driven load is too big**

* **Once the rejuvenated energy is greater than 400V(Series 200~240V) or 800V (Series 380~480V), the over voltage protection immediately functions.**

→ Extend the deceleration time.

→ Install a DC brake resistance (optional) of a grade not greater than 15HP exclusively for external use.

→ If the DC brake resistance is of a grade of 20HP or larger, an external brake unit and resistance must be provided.(Allowed option built-in brake unit.)

Stationary operation trip ?

◆ Err 7 appears during operation.

§ Insufficient voltage of power source?

→ Review the capacity of power supply equipment and find out the cause to the low voltage; such as , check if the contacts of no-fuse-breaker of magnetic switch are in good condition

◆ Err 6 appears during operation.

§ Load and motor or source voltage is to blame?

§ If any poor motor insulation leading to leakage?

→ Install a DC brake resistance (optional) exclusively for external use.

→ Remove the output wire before feeding the electricity and activating; if Err6 displays, it indicates that the ac drive fails ; if Err 6 display disappears, it indicates leakage from the motor, replace the motor.

VII

TEST, INSPECTION & MAINTENANCE

◆ Test, Inspection, & Maintenance.....7-1

TEST, INSPECTION, & MAINTENANCE

CAUTION

Cautions:

- A maintenance professional shall confirm the current status of power supply switch in person. In order to ensure the safety of operation, strictly keep the power switch from the reach of irrelevant personnel with an identification label hung on the switch.
- Within a short period of time right after disconnection the power supply, there will be DC high voltage remained at the electrolytic capacitor of large capacity in the internal rectification loop of the ac drive. For this reason, please make sure to see if the (CHARGE) light is off before performing the substrate inspection

Highlights of Periodical Maintenance

○ **External terminals, components, and screws:**
Is there any loosening screw and connector? → If yes, install or tighten up.

○ **Cooling Fans:**
Is there any abnormal sound or vibration? → If yes, replace or clean up.

○ **Capacitor and parts:**
Is there any discoloration, carbonization or odor ? → If yes, return to the factory to replace the capacitor or the component of the inverter.

○ **Heat sink fins, Circuit board:**
Any dust built up or attached with Conductive chips, oil stain? → If yes, use air gun to clear with dry air. (Never use any cleanser at own discretion.)

Daily Inspection Items

- Motor follows the preset actions to run? Any faulty sound or vibration during operation?
- If the cooling fans installed below the inverter operates normally? Any sign of abnormal temperature rise?
- Check the output current detected by the monitor to see if it falls out of the normal range?
- If the ambient temperature maintains normal? The installation environment is normal?

※ **Please truly follow the check items listed in this manual to conduct them item by item to ensure this product is always maintained at a normal state for a long time**

CAUTION

The ac drive is comprised of many types of components, it depends on those parts and components for the ac drive to maintain and provide its expected functions. However, electronic parts usually are consumption items depending on the work environment and the use patter of the individual operator.
To maintain long-term normal operation, it is recommended to conductor periodical inspection and replacement as required.

VIII

Selecting Brake Resistance & Brake Unit

- Selecting Brake Unit.....8-1
- Selecting Brake Resistance.....8-3
- Braking resistor-watt and resistance values of the calculation.....8-5

Selecting the Brake Resistance Capacity

WARNING

The temperature surrounding of the brake resistance will rise after the continuous discharging by brake resistance to expose the objects in the vicinity. Therefore, always keep those objects at least 2M away from the brake resistance. Sufficient ventilation or additional fans shall be provided at where the brake resistance is installed.

Ac drive						Specification			
Voltage	Applicable motor		Equivalent resistance specification W / Ω	Brake Torque (10%ED) %	quivalent Min. resistance (Ω)	Brake Resistance (module)	Brake Resistance / SET	Externally Provided Unit Specification	Brake Unit / SET
	HP	KW							
200V	0.5	0.4	150W/150Ω	225	75Ω			Included	
	1	0.75	150W/150Ω	150	75Ω				
	2	1.5	300W/100Ω	125	39Ω				
	3	2.2	500W/60Ω	140	30Ω				
	5	3.7	800W/40Ω	125	27Ω				
	7.5	5.5	1200W/25Ω	135	18Ω	DR1K5W-24	1		
	10	7.5	1500W/20Ω	125	10Ω	DR1K5W-20	1		
	15	11	2200W/13.6Ω	125	10Ω	DR3K1W-12	1		
	20 △	15	3000W/10Ω	125	6.6Ω	DR3K1W-10	1	LSBR-2015B	1
	25 △	18.5	3700W/8Ω	125	6.6Ω	DR4K6W-8	1	LSBR-2022B	1
	30 △	22	4400W/6.8Ω	125	3.3Ω	DR4K6W-6.6	1	LSBR-2022B	1
	40 △	30	6000W/5Ω	125	3.3Ω	DR6K2W-5	1	LSBR-2015B	2
	50 △	37	7400W/4Ω	125	3.3Ω	DR4K6W-8	2	LSBR-2022B	2
	60 △	45	9000W/3.3Ω	125	2.5Ω	DR4K6W-6.6	2	LSBR-2022B	2
	75 △	55	11000W/2.7Ω	125	2.5Ω	DR6K2W-5	2	LSBR-2022B	3
	100	75	15000W/2Ω	125		DR6K2W-6	3	LSBR-2022B	4
	125	90	18000W/1.6Ω	125		DR6K2W-5	3	LSBR-2022B	4 or 5
	150	110	22000W/1.3Ω	125		DR6K2W-5	4	LSBR-2022B	5

△ : An additional brake circuit can be fitted into the ac drive when placing the purchase order.

Ac drive						Specification			
Voltage	Applicable motor		Equivalent resistance specification W / Ω	Brake Torque (10%ED) %	quivalent Min. resistance (Ω)	Brake Resistance (module)	Brake Resistance / SET	Externally Provided Unit Specification	Brake Unit / SET
	HP	KW							
400V	1	0.75	150W/300Ω	200	150Ω			Included	
	2	1.5	300W/300Ω	155	150Ω				
	3	2.2	500W/150Ω	175	72Ω				
	5	3.7	800W/100Ω	170	72Ω				
	7.5	5.5	1200W/80Ω	155	40Ω	DR1K5W-80	1		
	10	7.5	1500W/60Ω	155	40Ω	DR1K5W-60	1		
	15	11	2200W/50Ω	135	40Ω	DR3K1W-48	1		
	20 △	15	3000W/40Ω	125	20Ω	DR3K1W-40	1	LSBR-4015B	1
	25 △	18.5	3700W/32Ω	125	20Ω	DR4K6W-30	1	LSBR-4030B	1
	30 △	22	4400W/27.2Ω	125	20Ω	DR4K6W-30	1	LSBR-4030B	1
	40 △	30	6000W/20Ω	125	14.3Ω	DR6K2W-20	1	LSBR-4030B	1
	50 △	37	7400W/16Ω	125	14.3Ω	DR4K6W-30	2	LSBR-4030B	2
	60 △	45	9000W/13.3Ω	125	10Ω	DR4K6W-6.6	2	LSBR-4030B	2
	75 △	55	11000W/10Ω	125	6.6Ω	DR6K2W-20	2	LSBR-4030B	2
	100	75	15000W/8Ω	125	6.6Ω	DR6K2W-24	3	LSBR-4030B	3
	125	90	18000W/6.6Ω	125		DR6K2W-20	3	LSBR-4030B	3
	150	110	22000W/5.4Ω	125		DR6K2W-20	4	LSBR-4030B	4
	175	132	26400W/4.5Ω	125		DR6K2W-20	4	LSBR-4030B	5
	200	160	32000W/3.7Ω	125		DR6K2W-20	5	LSBR-4030B	6
	250	185	37000W/3.2Ω	125		DR6K2W-20	6	LSBR-4030B	7
	300	220	44000W/2.7Ω	125		DR6K2W-20	8	LSBR-4030B	8
	400	300	60000W/2Ω	125		DR6K2W-20	10	LSBR-4030B	10
	500	375	75000W/1.6Ω	125		DR6K2W-24	13	LSBR-4030B	13

△：An additional brake circuit can be fitted into the ac drive when placing the purchase order.

Selection of brake Resistance

◆ DR brake resistance specifications

Model No.		Model	Connection
DR1K5W-R		R1.R2 wire gauge above 3.5mm	
R	16Ω	Figure A	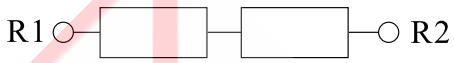
	20Ω		
	24Ω		
	40Ω		
DR3K1W-R		R1.R2 wire gauge above 5.5mm	
R	8Ω	Figure B	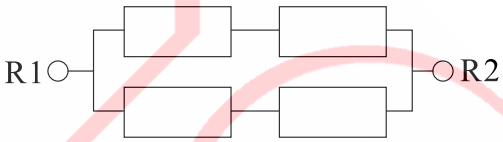
	10Ω		
	12Ω		
	20Ω		
	32Ω	Figure B	
	40Ω		
	48Ω		
	60Ω		
DR4K6W-R		R1.R2 wire gauge above 5.5mm	
R	5.3Ω	Figure B	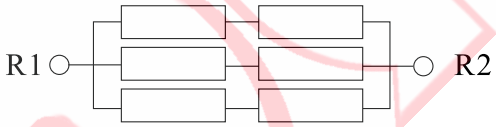
	6.6Ω		
	8Ω		
	13.3Ω		
	12Ω		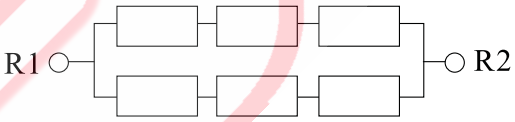
	15Ω		
	18Ω		
	30Ω		
DR6K2W-R		R1.R2 wire gauge above 8.0mm	
R	4Ω	Figure C	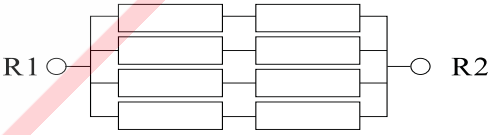
	5Ω		
	6Ω		
	10Ω		
	16Ω	Figure C	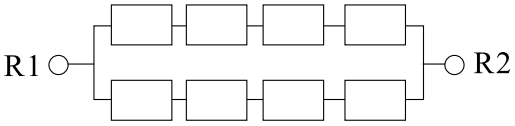
	20Ω		
	24Ω		
	40Ω		

◆ Description of model number

DR 3K1W - 10

- Brake resistance module
- Rated power
- Resistance

Resistance cyclic curve

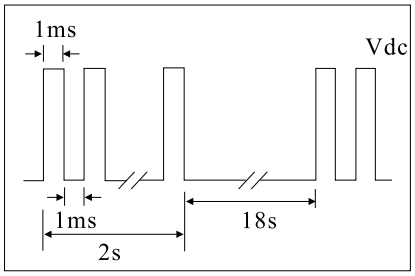

Resistance power condition

1. Duty/Cycle : 1ms/2ms
2. Brake time : 2S
3. Rest time : 18S

Effective Duty (ED%)

$$ED\% = \frac{2S}{20S} \times 100\% = 10\%$$

◆ Dimension of machine box

Fig. A

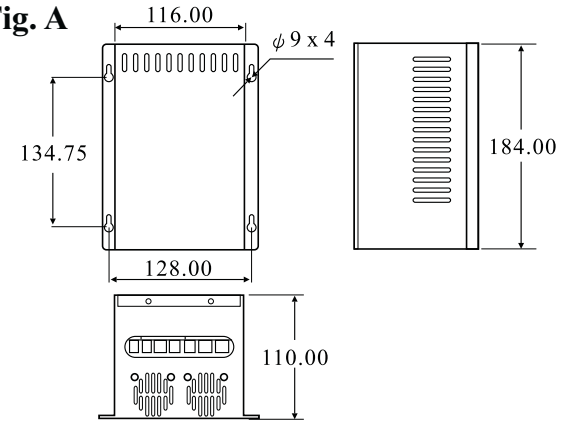

Fig. B

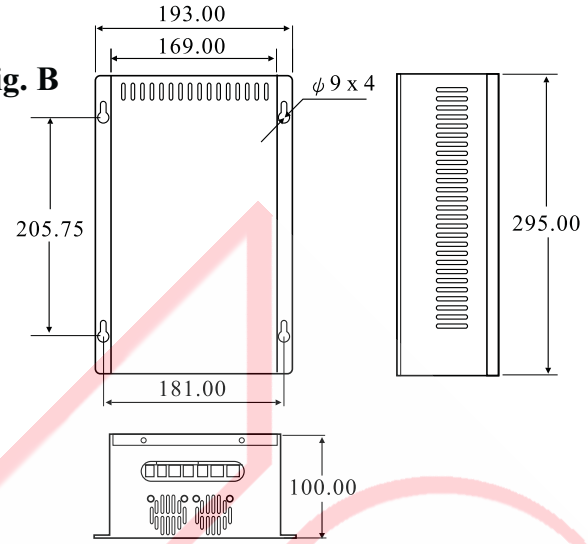

Fig. C

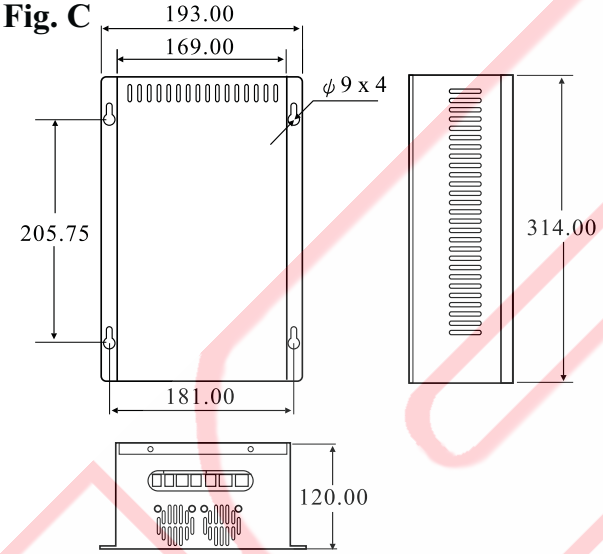

Fig. D

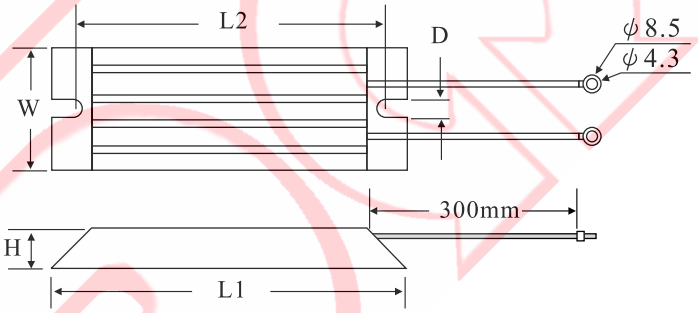

Model No	Dimensions (mm) ±3%					Resistance range (Ω)	Model No	Dimensions (mm) ±3%					Resistance range (Ω)
	L1	L2	H	D	W			L1	L2	H	D	W	
SDR80W	140	125	20	5.2	40	0.1～10K	SDR300W	215	200	30	5.2	60	0.5～30K
SDR100W	165	150	20	5.2	40	0.1～10K	SDR400W	265	250	30	5.2	60	0.5～30K
SDR120W	190	175	20	5.2	40	0.15～15K	SDR500W	335	320	30	5.2	60	0.5～30K
SDR150W	215	200	20	5.2	40	0.15～15K	SDR600W	335	320	30	5.2	60	1～50K
SDR200W	165	150	30	5.2	60	0.3～20K	SDR800W	400	385	40	5.2	80	1～50K

(Resistance can be set up according to the requirements)

★ NOTE :

1. Please select the resistance (ohms), watts and the frequency of application (ED%) specified by the Company.
2. A precaution toward the safety and inflammability around the peripheral environment shall be made when installing the brake resistance.
3. For an application with more than two sets of brake unit, please pay attention to the equivalent resistance after installing these brake units in parallel connection that shall not be lower than the equivalent minimum resistance of each brake units. When using the brake unit is desired, please peruse the operation instruction of brake unit and connect the wirings accordingly.

Braking resistor-watt and resistance values of the calculation

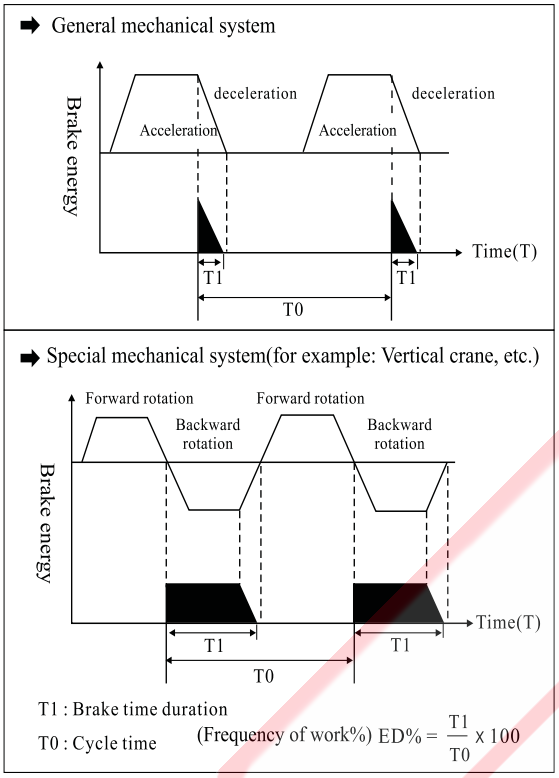

Brake torque	Resistance value	200V~230V	380V~460V
125%	R	150/Motor KW	600/Motor KW
130%	R	143.75/Motor KW	575/Motor KW
135%	R	137.5/Motor KW	550/Motor KW
140%	R	131.25/Motor KW	525/Motor KW
150%	R	118.75/Motor KW	475/Motor KW
160%	R	106.25/Motor KW	425/Motor KW
170%	R	93.75/Motor KW	375/Motor KW
180%	R	81.25/Motor KW	325/Motor KW

Example：380V / 100HP / 75KW (brake torque 125%，10%ED)

Long Braking

Resistance power (W) = （Motor）75000W × 20%＝15000(W)

Resistance value (R) = 600 / 75KW = 8Ω

★Caution:

1：The smaller the resistance, the bigger the brake torque; and the higher current flowing through the brake unit

2：Do not let the working current of brake unit exceed there of allowable maximum current, otherwise the device will be damaged.

◆ Method of calculation for resistance power (10% ED)：

◎ Brake-characterized resistance power

1. General load :

Resistance power (W) = Motor (W) × 10%

2. Frequently brake cycle T0 (Less than 5 times per minute) :

Resistance power (W) = Motor (W) × 15%

3. Long-time brake T1 (Less than 4 seconds per time) :

Resistance power (W) = Motor (W) × 20%

4. Long-time brake with bigger inertia T1(Less than 10 seconds per time) :

Resistance power (W) = Motor (W) × (More than 40%)

★ Note：

1：When connecting multiple units of brake resistance, it is recommended that brake resistances should be connected in series; when required a parallel connection, the brake resistance value, wire diameter, and wire length shall be consistent; so that the current can be evenly shunted to effectively protect the service life of every unit of brake resistance. After being serially or parallel connected for use, the resistance of each unit shall be consistent, and be cautious to the final sum of .

2：After being serially or parallel connected for use, the resistance of each unit shall be consistent, and be cautious to the final sum of resistance.

IX APPENDIX

- A. Standard specifications.....9-1
- B. Ex-factory set values.....10-1
- C. Parameter Setup Schedule.....11-1
- D. Err Display.....12-1
- E. Drawing of Mechanism Appearance...13-1

Appendix A –Standard specifications–

200V series specifications

	Model No. LS800-2□□□	0K4	0K7	1K5	2K2	4K0	5K5	7K5	011	015	018	022	030	037	045	055	075	090	110
	Applicable motor power (KW)	0.4	0.75	1.5	2.2	4.0	5.5	7.5	11	15	18.5	22	30	37	45	55	75	90	110
	Applicable motor power (HP)	0.5	1	2	3	5	7.5	10	15	20	25	30	40	50	60	75	100	125	150
Outpour	Rated output capacity (KVA)	1.4	1.9	2.8	4.7	6.6	9.5	12.9	19	25	31	38	49	62	72	87	114	133	173
	Continuous rated current (A)	3.7	5	7.5	12.5	17.5	25	34	50	68	82	100	130	165	190	230	300	350	455
	Max. output voltage (V)	3-phase corresponding input voltage																	
	Output frequency range (Hz)	0.0～400.0Hz																	
	Carrier frequency (Hz)	16KHZ					12KHZ			10KHZ			8KHZ			6KHZ		5KHZ	3KHZ
Power supply	Input voltage, frequency	3-phase power supply 200V～240V 50/60HZ																	
	Tolerance for voltage fluctuation of power supply	±10% (180V～264V)																	
	Tolerance for frequency fluctuation of power supply	±8% (47HZ～64.8HZ)																	
	Cooling fan	Forced fan																	

400V series specifications

	Model No. LS800-4□□□	0K7	1K5	2K2	4K0	5K5	7K5	011	015	018	022	030	037	045	055	075	090	110	132	160	185	220	300	375
	Applicable motor power (KW)	0.75	1.5	2.2	4.0	5.5	7.5	11	15	18.5	22	30	37	45	55	75	90	110	132	160	185	220	300	375
	Applicable motor power (HP)	1	2	3	5	7.5	10	15	20	25	30	40	50	60	75	100	125	150	175	200	250	300	400	500
Outpour	Rated output capacity (KVA)	2.8	3.8	5.7	7.6	10.6	13.3	19	28	32	38	51	62	76	99	125	152	175	209	228	266	346	438	544
	Continuous rated current (A)	3.7	5	7.5	10	14	17.5	25	38	43	50	68	82	100	130	165	200	230	275	300	350	455	550	683
	Max. output voltage (V)	3-phase corresponding input voltage																						
	Output frequency range (Hz)	0.0～400.0Hz																						
	Carrier frequency (Hz)	16KHZ				12KHZ			10KHZ			8KHZ			6KHZ		5KHZ		4KHZ		3KHZ		2KHZ
Power supply	Input voltage, frequency	3-phase power supply 380V～480V 50/60Hz																						
	Tolerance for voltage fluctuation of power supply	±10%(342V～506V)																						
	Tolerance for frequency fluctuation of power supply	±8%(47HZ～64.8HZ)																						
	Cooling fan	Forced fan																						

Common characteristics

Control	Control method	Sine wave SVPWM, 2-phase or 3-phase modulation, switching frequency 1K～16KHZ adjustable, five control modes－V/F、V/F + closed loop、V/F sensorless、Flux vector control + closed loop、Flux vector sensorless.
	Max. output frequency	0.0～400.0Hz
	Frequency precision (temperature fluctuation)	Digital signal：±0.1%(-10℃～+40℃) , Analog signal：±0.1%(25℃±10℃)
	Precision for frequency setup	Digital signal：0.1Hz(0.0～400.00Hz) , Analog signal：0.1/60.0Hz
	Precision for speed regulation	Voltage sensor-less vector：＞10Hz： ± 1.0 %，V/F：± 3.0% ~ 5.0%
	Acceleration / deceleration time	0.0～30000(seconds), acceleration/deceleration can be governed by 4 types of adjustment respectively and portioned out into 16 stages of speed for application.
	Control functions	40 display functions, 8 rpm command sources, Torque Limit, zero-speed vector control, variable and constant torque control, selection of sink and source, upper & lower frequency setup, AVR function, S-curve, multiplexing input, output terminal control, 16 preset stages for speed regulation, hopping frequency, Auto-Tuning, detection & measurement of static and dynamic motor parameters, , slip compensation, Torque compensation, dual PID functions, DC brake at on/off, multi-stage operation functions, RS485/Modbus communication, automatic operation function, energy-saving operation.
	Signal for frequency setup	DC 0 ～ ±10V ，DC 0 ～ +10V，4 ～ 20mA
	Brake torque	20% approximately, 125% with brake controller mounted.
	Control functions	Digital operation panel, speed regulation, sensor-less flux control, PID control, multi-stage speed control, etc.
Protection functions	Motor protection	Integral electronic thermal relay protections.
	Over-current protection	Will trip at over-current protection to enable a free run of motor when exceeding the 200% rated current
	Overload ability of ac drive	Motor rated output current exceeds the 150%, cumulative time 1 minutes free running stop.
	Over-voltage protection	Over-voltage level: Vdc > 400V(200V~240Vclass) /Vdc > 800V(380V~480Vclass)
	Low-voltage protection	Low-voltage level: Vdc < 180V(200V~240Vclass) / Vdc < 380V(380V~480Vclass)
	Power supply protection	Under phase protection for input power supply (equipped for ac drive with a power above 5.5KW), under phase protection for output (equipped for ac drive with a power above 0.4KW)
	Superheating heat radiation fins	Thermal coupler protection 85°C ±5°C
	Stall protection	To protect the device from stall during acceleration/deceleration and operation.
	Grounding protection	To protect electronic circuits.
	Charging indication	Charging indicator will be turned “ON” when the DC voltage of main circuit is over 50V.
	Place used	Indoor places free of corrosion or dusts.
Environment conditions	Ambient temperature	-10°C ~ +45°C (Lock wall-mounting model), -10°C ~ +50°C (open model) free of freezing condition
	Storage temperature (Note 1)	-20°C ~ +60°C
	Humidity	Below 95%RH (no condensation condition)
	Vibration	20Hz ≤1G, 20 ~ 50Hz 0.2G
※ Note 1：A too high storage temperature may damage the capacitor of main circuit.		

Appendix B –Ex-factory set values–

200V Series

Horsepower	KW	20K4	20K7	21K5	22K2	24K0	25K5	27K5	2011	2015
	HP	0.5	1	2	3	5	7.5	10	15	20
F126		0.040	0.040	0.030	0.030	0.025	0.025	0.020	0.020	0.015
F128		5000	5000	5000	5000	5000	5000	5000	5000	5000
F129		220 V	220 V	220 V	220 V	220 V	220 V	220 V	220 V	220 V
Motor's rated parameters	F141	220 V	220 V	220 V	220 V	220 V	220 V	220 V	220 V	220 V
	F142	2.0 A	3.5 A	6.0 A	8.2 A	15 A	20 A	27 A	38 A	50 A
	F143	60 Hz	60 Hz	60 Hz	60 Hz	60 Hz	60 Hz	60 Hz	60 Hz	60 Hz
	F144	1680	1710	1710	1720	1720	1740	1740	1755	1755
	F145	0.5 HP	1.0 HP	2.0 HP	3.0 HP	5.0 HP	7.5 HP	10 HP	15 HP	20 HP
	F146	4P	4P	4P	4P	4P	4P	4P	4P	4P

Horsepower	KW	2018	2022	2030	2037	2045	2055	2075	2090	2110
	HP	25	30	40	50	60	75	100	125	150
F126		0.015	0.010	0.010	0.008	0.008	0.006	0.006	0.003	0.003
F128		5000	5000	5000	5000	5000	3000	3000	3000	2000
F129		220 V	220 V	220 V	220 V	220 V	220 V	220 V	220 V	220 V
Motor's rated parameters	F141	220 V	220 V	220 V	220 V	220 V	220 V	220 V	220 V	220 V
	F142	62 A	75 A	97 A	128 A	150 A	187 A	235 A	300 A	355 A
	F143	60 Hz	60 Hz	60 Hz	60 Hz	60 Hz	60 Hz	60 Hz	60 Hz	60 Hz
	F144	1760	1760	1760	1775	1775	1780	1780	1780	1780
	F145	25 HP	30 HP	40 HP	50 HP	60 HP	75 HP	100 HP	125 HP	150 HP
	F146	4P	4P	4P	4P	4P	4P	4P	4P	4P

400V Series

Horsepower	KW	40K7	41K5	42K2	44K0	45K5	47K5	4011	4015	4018	4022	4030
	HP	1	2	3	5	7.5	10	15	20	25	30	40
F126		0.040	0.030	0.030	0.025	0.025	0.020	0.020	0.015	0.015	0.010	0.010
F128		5000	5000	5000	5000	5000	5000	5000	5000	5000	5000	5000
F129		380 V	380 V	380 V	380 V	380 V	380 V	380 V	380 V	380 V	380 V	380 V
Motor's rated parameters	F141	380 V	380 V	380 V	380 V	380 V	380 V	380 V	380 V	380 V	380 V	380 V
	F142	1.9 A	3.7 A	5.3 A	8.2 A	12 A	15 A	22 A	28 A	36 A	44 A	58 A
	F143	60 Hz	60 Hz	60 Hz	60 Hz	60 Hz	60 Hz	60 Hz	60 Hz	60 Hz	60 Hz	60 Hz
	F144	1710	1710	1720	1720	1740	1740	1755	1755	1760	1760	1760
	F145	1.0 HP	2.0 HP	3.0 HP	5.0 HP	7.5 HP	10 HP	15 HP	20 HP	25 HP	30 HP	40 HP
	F146	4P	4P	4P	4P	4P	4P	4P	4P	4P	4P	4P

Horsepower	KW	4037	4045	4055	4075	4090	4110	4132	4160	4185	4220	保留
	HP	50	60	75	100	125	150	175	200	250	300	
F126		0.008	0.008	0.006	0.006	0.003	0.003	0.003	0.003	0.003	0.003	保留
F128		5000	5000	4000	4000	3000	3000	3000	3000	2000	2000	
F129		380 V	380 V	380 V	380 V	380 V	380 V	380 V	380 V	380 V	380 V	
Motor's rated parameters	F141	380 V	380 V	380 V	380 V	380 V	380 V	380 V	380 V	380 V	380 V	
	F142	72 A	84 A	108 A	135 A	165 A	210 A	260 A	290 A	340 A	385 A	
	F143	60 Hz	60 Hz	60 Hz	60 Hz	60 Hz	60 Hz	60 Hz	60 Hz	60 Hz	60 Hz	
	F144	1775	1775	1780	1780	1780	1780	1780	1780	1780	1780	
	F145	50 HP	60 HP	75 HP	100 HP	125 HP	150 HP	175 HP	200 HP	250 HP	300 HP	
	F146	4P	4P	4P	4P	4P	4P	4P	4P	4P	4P	

Appendix C –Parameter Setup Schedule–

R : (○) denotes that performing to set up the function is permitted during operation.

Parameter List LS800 NO.2.31 and NO.2.32 Version

1	R	Parameter	Description	Range	Unit	Ex-factory Setting	Page No.
Operation status display setup	○	F0	Operation panel display selection	0～40		1	P5-1
	0 : Frequency command (F) 1 : Output frequency (H) 2 : Output current (A) 3 : Output voltage (E) 4 : PG feedback speed rpm (n) 5 : Pulse frequency command 6 : Vector Estimated RPM 7 : Output power supply frequency 8 : Unitless 9 : Slipping frequency 10 : Vdc (V) 11 : Excitation voltage 12 : Torque voltage 13 : Excitation current command 14 : Torque current command 15 : Excitation current 16 : Torque current 17 : Output power (%) 18 : True power(%) 19 : virtual power (%) 20 : Temperature (°C) 21 : Counts Value 22 : Digital input status 23 : Digital output status 24 : Digital operation panel AV(%) 25 : AV1(%) 26 : AV2(%) 27 : AI(%) 28 : Vdc_0V 29 : Cycle & Multiple stage 30 : K_Vdc 31 : Phase U current (rms) 32 : Phase V current (rms) 33 : Phase W current (rms) 34 : PID(%) 35 : Reserved 36 : Software version 37 : Position-tracking error 38 ~ 40 : Reserved				
	○	F1	LPF filtration time display	0～15		6	P5-3
	○	F2	Speed display unit	0～1		0	
	0 : Frequency (Hz) 1 : rpm (Rpm)						
	○	F3	Unitless display of fold of multiplication (Max multiplying display value=3276.7)	0.001～10.000		1.000	P5-3
Operation control parameters	×	F4	Operation control source	0～1		0	P5-3
	0 : Digital operation panel 1 : Digital input terminal						
	×	F5	Frequency command source	0～8		1	P5-3
	0 : Digital operation panel (F17) 1 : Operation panel AV input (V.R) 2 : AV1 input (±10V) 3 : AV2 input (+10V) 4 : AI input (20mA or +10V) 5 : AV2+AI 6 : Pulse frequency command 7 : External PID 8 : External PID or AV2						
	×	F6	Start Mode	0～2		0	P5-5
	0：Started on by start frequency 1：Flying Re-start activation 2：DC Brake before Starting by Activation Frequency						
	×	F7	Stop Mode	0～2		1	P5-6
	0 : Coast to Stop 1: Dynamic Stop 2 : Dynamic DC stop						
	×	F8	Brake Time before Activation	0.0～120.0	Second	5.0	P5-6
	×	F9	Current of Brake before Activation	0.00～1.00	Pu	0.20	
	×	F10	Stop brake time	0.0～120.0	Second	5.0	P5-7
	×	F11	Stop brake current	0.00～1.00	Pu	0.20	
	×	F12	(V/F) Stop brake beginning frequency	0.0～60.0	Hz	0.0	
	※ This setup is effective only to V/F mode setup, brake-to-stop by vector control can be activated provided that the speed has been decelerated to zero speed.						

R : (○) denotes that performing to set up the function is permitted during operation.

2	R	Parameter	Description	Range	Unit	Ex-factory Setting	Page No.
Speed limit	×	F13	Rotating Direction Control	0～3		1	P5-7
	0 : Either FWD or REV. 1: FWD only 2 : REV only 3 : REV only with negative bias						
	×	F14	Lower Limit Frequency (※F14≦F15)	0.0～400.0	Hz	0.0	P5-8
	×	F15	Upper Limit Frequency (※F14≦F15)	0.0～400.0	Hz	60.0	
	×	F16	Activation Frequency	0.0～30.0	Hz	0.0	
Multi-stage speed command setup	○	F17	Master speed	0.0～400.0	Hz	5.0	P5-9
	○	F18	Stage 1 speed	0.0～400.0	Hz	5.0	
	○	F19	Stage 2 speed	0.0～400.0	Hz	10.0	
	○	F20	Stage 3 speed	0.0～400.0	Hz	15.0	
	○	F21	Stage 4 speed	0.0～400.0	Hz	20.0	
	○	F22	Stage 5 speed	0.0～400.0	Hz	30.0	
	○	F23	Stage 6 speed	0.0～400.0	Hz	40.0	
	○	F24	Stage 7 speed	0.0～400.0	Hz	50.0	
	○	F25	Stage 8 speed	0.0～400.0	Hz	0.0	
	○	F26	Stage 9speed	0.0～400.0	Hz	0.0	
	○	F27	Stage 10 speed	0.0～400.0	Hz	0.0	
	○	F28	Stage 11 speed	0.0～400.0	Hz	0.0	
	○	F29	Stage 12 speed	0.0～400.0	Hz	0.0	
	○	F30	Stage 13 speed	0.0～400.0	Hz	0.0	
	○	F31	Stage 14 speed	0.0～400.0	Hz	0.0	
	○	F32	Stage 15 speed	0.0～400.0	Hz	0.0	
	○	F33	Inching speed	0.0～400.0	Hz	5.0	
	(※ F14 ≦ Set value ≦ F15)						
Acceleration and deceleration time	×	F34	Acceleration/deceleration time unit	0～2		1	P5-10
	0：0.01 second 1：0.1 second 2：1 second						
	○	F35	Master Speed,Stage 4,Stage 8,Stage 12, Acceleration time 0	0.0～30000	Second	10.0	P5-10
	○	F36	Master Speed,Stage 4,Stage 8,Stage 12, Deceleration time 0	0.0～30000	Second	10.0	
	○	F37	Stage 1,Stage 5,Stage 9,Stage 13, Acceleration time 1	0.0～30000	Second	10.0	
	○	F38	Stage 1,Stage 5,Stage 9,Stage 13, Deceleration time 1	0.0～30000	Second	10.0	
	○	F39	Stage 2,Stage 6,Stage 10,Stage 14 , Acceleration time 2	0.0～30000	Second	10.0	

R : (○) denotes that performing to set up the function is permitted during operation.

3	R	Parameter	Description	Range	Unit	Ex-factory Setting	Page No.
Acceleration and deceleration time	○	F40	Stage 2,Stage 6,Stage 10,Stage 14 , Deceleration time 2	0.0～30000	Sec.	10.0	P5-10
	○	F41	Stage 3,Stage 7,Stage 11,Stage 15, Acceleration time 3	0.0～30000	Sec.	10.0	
	○	F42	Stage 3,Stage 7,Stage 11,Stage 15 , Deceleration time 3	0.0～30000	Sec.	10.0	
	○	F43	Inching acceleration time	0.0～30000	Sec.	5.0	
	○	F44	Inching deceleration time	0.0～30000	Sec.	5.0	
	×	F45	Multi-stage acceleration/ deceleration time allotment	0～2		0	P5-11
	0 : All Internal Allotment； 1: Half Internal Allotment and another Half External Terminals; 2 : All External Terminals						
	×	F46	S-curve time when starting the acceleration	0.00～3.00	Sec.	0.00	P5-11
	×	F47	S-curve time when finishing the acceleration	0.00～3.00	Sec.	0.00	
	×	F48	S-curve time when starting the deceleration	0.00～3.00	Sec.	0.00	
	×	F49	S-curve time when finishing the deceleration	0.00～3.00	Sec.	0.00	
Analog frequency commands	○	F50	AV : 0V input bias %	-300.00～300.00	%	0.00	P5-12
	○	F51	AV : 5V input gain %	-300.00～300.00	%	100.00	
	○	F52	AV1 : -10V input bias %	-300.00～300.00	%	-100.00	P5-13
	○	F53	AV1 : 10V input gain %	-300.00～300.00	%	100.00	
	○	F54	AV1 : Dead Band Voltage (Dead Band)	0.00～85.00	%	0.00	
	○	F55	AV1 : Zero-point output gain	0.00～50.00	%	0.00	
	○	F56	AV1 : Maximal output limit	10.00～100.00	%	100.00	
	○	F57	AV2 : 0V input bias %	-300.00～300.00	%	0.00	P5-15
	○	F58	AV2 : 10V input gain %	-300.00～300.00	%	100.00	
	○	F59	AV2 : Dead Band Voltage (Dead Band)	0.00～85.00	%	0.00	
	○	F60	AV2 : Zero-point output gain	0.00～50.00	%	0.00	
	○	F61	AV2 : Maximal output limit	10.00～100.00	%	100.00	
	○	F62	AI : 4mA (or 0V) input bias %	-300.00～300.00	%	0.00	
	○	F63	AI : 20mA (or 10V) input gain %	-300.00～300.00	%	100.00	
	○	F64	AI : Dead band voltage (Dead Band)	0.00～85.00	%	0.00	
	○	F65	AI : Signal Input mode	0～1	%	0	
	0 : 4～20mA； 1 : 0～10V；						
	○	F66	AI：signal Interrupts detection (F5 = 4)	0～3	%	0	
	0 : Not detected 1 : Slow down to zero Hz after stopping 2 : Coast to stop 3 : Maintain the frequency of operation before break						
	×	F67	Digital Terminal Scan Cycle	1～5000	0.2ms	10	P5-18

R : (○) denotes that performing to set up the function is permitted during operation.

4	R	Parameter	Description		Range	Unit	Ex-factory Setting	Page No.
Digital input	×	F68	Di1,Di2 setup		0～1		0	P5-18
	0:Di1(FWD/STOP), Di2(REV/STOP) 1:Di1(RUN/STOP), Di2(FWD/REV)							
	×	F69	Di3 setup	※Settings for multi-function input terminals should never be repeated except	0～24		2	P5-19
	×	F70	Di4 setup		0～24		4	
	×	F71	Di5 setup		0～24		5	
	×	F72	Di6 setup		0～24		6	
	×	F73	Di7 setup		0～24		9	
	×	F74	Di8 setup		0～24		18	
	0 : Disabled 1 : 3-wire control 2 : Input in Case of External Abnormality (NO) 3 : Input in Case of External Abnormality (NC) 4 : RESET 5 : Multi-stage speed command 1 6 : Multi-stage speed command 2 7 : Multi-stage speed command 3 8 : Multi-stage speed command 4 9 : Inching Operation 10 : Acceleration/ Deceleration Time Command 1 11 : Acceleration/ Deceleration Time Command 2 12 : Master Speed Increase 13 : Master Speed Decrease 14 : Automatic Operation 15 : Auto Operation Suspended 16 : Counter Signal Input 17 : Counter Zero-in 18 : Coast to stop 19 : Auto saving Operation 20 : Second Unit PID 21 : Di enables PID 22 : Di enables AV2 23 : Di enables AI 24 : Zero servo							
Digital output	×	F75	Relay1 setup		0～12		1	P5-22
	×	F76	DO1 setup		0～12		11	
	×	F77	DO2 setup		0～12		6	
	×	F78	DO3 setup		0～12		7	
	×	F79	Relay2 setup		0～12		3	
	0 : Disabled 1 : Output in Case of Abnormality (NO) 2 : Output in Case of Abnormality (NC) 3 : In Operation 4 : Frequency Attained 1 5 : Frequency Attained 2 6 : Consistent Frequency 7 : Overload Warning 8 : Overload Timing Forecast 9 : Counter Cycle is Up 10 : Comparator Counting is Up 11 : Zero-Speed Detected 12 : Timer function output							
	×	F80	Frequency Consistent Width		0.0～10.0	Hz	1.0	P5-23
	×	F81	Frequency Attained 1		0.0～400.0	Hz	60.0	
	×	F82	Frequency Attained 2		0.0～400.0	Hz	60.0	
	×	F83	Magnetic Stagnation Width Attained		0.0～10.0	Hz	1.0	
	×	F84	Counting Cycle		0～30000	P	1000	P5-24
	×	F85	Comparative Counting		0～30000	P	500	
	×	F86	ON-Delay time counting		0.00～60.00	Sec.	0.00	
	×	F87	OFF-Delay time counting		0.00～60.00	Sec.	0.00	
Frequency skip	×	F88	Frequency skip 1		0.0～400.0	Hz	0.0	P5-25
	×	F89	Frequency skip 2		0.0～400.0	Hz	0.0	
	×	F90	Frequency skip 3		0.0～400.0	Hz	0.0	
	×	F91	Frequency Skip Width		0.0～10.0	Hz	0.0	

Appendix C –Parameter Setup Schedule–

R : (○) denotes that performing to set up the function is permitted during operation.

5	R	Parameter	Description	Range	Unit	Ex-factory Setting	Page No.
Motor protection setup	○	F92	Stalling Protection setup	0～31		3	P5-25
	bit0：Protection function F93 bit1：Protection function F94 bit2：Protection function F96 bit3：Inhibit inertia at motor start bit4：Automatic Voltage Regulation (AVR)						
	×	F93	Deceleration stalling voltage setup	1.00～1.25		1.20	P5-27
	×	F94	Acceleration Stalling Current Setup	0.50～2.50	Pu	1.50	
	×	F95	Start Thermal relays the current setting of position	0.80～1.30	Sec.	1.00	
	×	F96	Current level of electronic thermal relay	1.00～2.50	Pu	1.50	
	×	F97	Acting time of electronic thermal relay	0.1～120.0	Sec.	60.0	
	×	F98	V / F output current limit	0.20～1.45		1.30	P5-28
	×	F99	Leaking current, 3-phase current, and abnormal level setup	0.001～0.500	Pu	0.250	
	×	F100	Over Temp Protection Setup	60.00～95.00	℃	88.00	
	×	F101	Fan Activating Temp. Setup	40.00～60.00	℃	45.00	
	×	F102	Brake discharging level	1.12～1.40	Pu	1.20	P5-29
Automatic operation functions	×	F103	Automatic Operation Mode	0～4		0	
	0：Disabled 1：Reciprocal mode 2：Cyclic mode 3：Master speed after reciprocal mode 4：Master speed after cyclic mode						
	×	F104	Number of Cycles	1～1000	Cycle	1	P5-30
	×	F105	Time of automatic operation mode at master speed	-30000～30000	Sec.	5	
	×	F106	Time of automatic operation mode at stage 1	-30000～30000	Sec.	0	
	×	F107	Time of automatic operation mode at stage 2	-30000～30000	Sec.	0	
	×	F108	Time of automatic operation mode at stage 3	-30000～30000	Sec.	0	
	×	F109	Time of automatic operation mode at stage 4	-30000～30000	Sec.	0	
	×	F110	Time of automatic operation mode at stage 5	-30000～30000	Sec.	0	
	×	F111	Time of automatic operation mode at stage 6	-30000～30000	Sec.	0	
	×	F112	Time of automatic operation mode at stage 7	-30000～30000	Sec.	0	
	×	F113	Time of automatic operation mode at stage 8	-30000～30000	Sec.	0	
	×	F114	Time of automatic operation mode at stage 9	-30000～30000	Sec.	0	
	×	F115	Time of automatic operation mode at stage 10	-30000～30000	Sec.	0	
	×	F116	Time of automatic operation mode at stage 11	-30000～30000	Sec.	0	
	×	F117	Time of automatic operation mode at stage 12	-30000～30000	Sec.	0	
	×	F118	Time of automatic operation mode at stage 13	-30000～30000	Sec.	0	
	×	F119	Time of automatic operation mode at stage 14	-30000～30000	Sec.	0	
	×	F120	Time of automatic operation mode at stage 15	-30000～30000	Sec.	0	
	×	F121	Maximum Output Voltage (U,V,W)	0.50～1.00	Pu	1.00	P5-31
	×	F122	Maximal Voltage Frequency	0.50～2.00	Pu	1.00	

※To execute revolution clockwise and the operation time, set up the seconds in positive value.

※To execute revolution counter-clockwise and the operation time, set up the seconds in negative value.

※To execute revolution direction control, refer to F13.

R : (○) denotes that performing to set up the function is permitted during operation.

6	R	Parameter	Description	Range	Unit	Ex-factory Setting	Page No.
Magnetic flux setup	×	F123	V/F Curve Option	-10～5		0	P5-31
	×	F124	Energy-saving Control Mode	0～2		0	
	0：Normal Mode 1：Efficiency control mode 2：External Terminal Control						
	○	F125	Oscillation inhibit gain	0.0～100.0	%	15.0	P5-32
	○	F126	Voltage boosting value (V/F torque compensation)	0.000～0.100	Pu	0.020	P5-33
AC drive parameters	×	F127	PWM Modulation Method	1～2		1	
	1：3-Phase SVPWM Modulation 2：2-Phase SVPWM Modulation						
	×	F128	PWM Switching Frequency	1000～16000	Hz	5000	P5-34
	×	F129	RST Input Voltage (rms)	150～500	V	220	
	(※ F129 set value must satisfy：F129 ≦ 1.5 × F141)						
	×	F130	Vdc gain (Read only)	50～300	Fold	140	P5-34
FM1 waveform output	**LS800 NO.2.31 Special-Purpose**						
	×	F131	FM1 Analog output mode	0～1		0	P5-34
	0：PWM Modulation Output 1：Pulse Frequency Output						
	○	F132	Multiple ratio of pulse frequency 1 (※ Max. Pulse Frequency Output 1.25kHz)	1～36		1	P5-34
	○	F133	FM1 Multifunctional output setup	0～21		1	
	0 : No Output 1 : Motor output speed 2 : PG feedback speed 3 : Pulse frequency command 4 : Sensor-less vector output speed 5 : Power supply source frequency 6 : Slip Frequency 7 : Output Voltage 8 : Excitation voltage 9 : Torque voltage 10 : Output Current 11 : Excitation Current Command 12 : Torque current command 13 : Excitation current 14 : Torque Current 15 : True Power 16 : Reactive power 17 : PID % output 18 : Keypad operate signal AV 19 : AV1 20 : AV2 21 : AI						
	○	F134	FM1 Analog output gain/10V	0.50～8.00	Pu	1.00	P5-35
	×	F135	FM1 Analog polarity setup	0～1		0	
	0 : Without Polarity (※PWM1 Output Voltage Signal < 5Vdc, motor engages in REV operation) 1 : With Polarity → (※PWM1 Output Voltage Signal = 5Vdc, motor stops) (※PWM1 Output Voltage Signal > 5Vdc, motor engages in FWD operation)						
FM2 waveform output	×	F136	FM2 Analog output mode	0～1		0	P5-35
	0：PWM Modulation Output 1：Pulse-wave Frequency Output						
	○	F137	Multiple ratio of pulse frequency 2(※ Max. pulse-wave frequency output 1.25kHz)	1～36		1	P5-35
	○	F138	FM2 Multifunctional output setup	0～21		10	
	※ Mode selection same as that for F133						
	○	F139	FM2 Analog output gain/10V	0.50～8.00	Pu	1.00	P5-35
	×	F140	FM2 Analog polarity setup	0～1		0	
	0：Without Polarity 1：With Polarity						

R : (○) denotes that performing to set up the function is permitted during operation.

7	R	Parameter	Description	Range	Unit	Ex-factory Setting	Page No.
FM1 waveform output	**LS800 NO.2.32 Special-Purpose**						
	×	F131	Longest outage duration allowable	0～5000	ms	20	P5-36
	×	F132	Terminal-actuating setup for failure reset and after power restoration	0～1		0	
	0：Direct Start　　1：Return the Start Command Terminal (Di)						
	×	F133	FM 1 Output Mode	0～2		0	P5-36
	0：0～10V　　1：±10V　　2：4～20mA						
	○	F134	FM1 Multifunctional output setup	0～21		1	P5-36
	0 : No Output 1 : Motor output speed 2 : PG feedback speed 3 : Pulse frequency command 4 : Sensor-less vector output speed 5 : Power supply source frequency 6 : Slip Frequency 7 : Output Voltage 8 : Excitation voltage 9 : Torque voltage 10 : Output Current 11 : Excitation Current Command 12 : Torque current command 13 : Excitation current 14 : Torque Current 15 : True Power 16 : Reactive power 17 : PID % output 18 : Keypad operate signal AV 19 : AV1 20 : AV2 21 : AI						
	○	F135	0V/4mA Bias gain	0.0～700.0	%	0.0	P5-36
	○	F136	10V / 20mA gain	0.0～700.0	%	100.0	
FM2	×	F137	FM2 output Mode	0～2		0	P5-37
	0：0～10V　　1：±10V　　2：4～20mA						
	○	F138	FM2 Multifunctional output setup	0～21		10	P5-37
	※ Mode selection same as that for F134						
	○	F139	0V / 4mA bias gain	0.0～700.0	%	0.0	P5-37
	○	F140	10V / 20mA gain	0.0～700.0	%	100.0	
Motor nameplate	×	F141	Rated voltage (rms)	150～500	V	N	P5-37
	×	F142	Rated current (rms)	1.0～1000.0	A	N	
	×	F143	Rated frequency(Hz)	10.0～150.0	Hz	N	
	×	F144	Rated speed	0～9000	rpm	N	P5-38
	×	F145	HP	0.5～600.0	HP	N	
	×	F146	No. of poles	2～32	Pole	N	
	Note: N= Inverter and motor capacity according to the actual difference do different factory settings.						
Control mode	×	F147	Control Mode Setup	-1～6		2	P5-38
	-1 : Static electric parameter detection 0 : Electric Parameter Detection 1 : Mechanical Parameter Detection 2 : Open Loop scalar Control (V/F) 3 : Closed Loop scalar Control (V/F + feedback) 4 : Sensorless scalar control (V/F sensorless vector control) 5 : Closed loop vector control (flux vector + PG) 6 : Sensorless vector control (sensorless flux vector control)						
	×	F148	Speed Feedback	0～1		0	P5-40
	0：No Feedback　　1：Encoder (PG)						

R : (○) denotes that performing to set up the function is permitted during operation.

8	R	Parameter	Description	Range	Unit	Ex-factory Setting	Page No.
Encoder setup	×	F149	Encoder (PG) pulse	600～2500	P/rev	1024	P5-40
	×	F150	Encoder (PG) direction	-1～1		1	
	-1：B leads A		0：Single Phase command	1：A leads B			
	○	F151	Encoder (PG) feedback speed/filtration time	0.0～100.0	ms	2.0	P5-40
	×	F152	PG off-line detection time	0.00～10.00	Sec.	3.00	
	×	F153	Pulse command	600～2500	P/rev	1024	
	×	F154	Pulse command direction setup	-1～1		1	
	-1：B leads A		0：Single Phase Feedback	1：A leads B			
	×	F155	Pulse-command multiplying factor	0.010～10.000	×	1.000	P5-41
Motor electric parameters	×	F156	Stator Resistance	500～32767		10000	P5-43
	×	F157	Rotor Resistance	500～32767		8000	
	×	F158	Stator Induction	3250～32767		9000	
	×	F159	Mutual Induction	3250～32767		8750	
	×	F160	No-load current (%)	12.50～99.00	%	40.00	
	×	F161	Mechanical Constant (rotor inertia)	0～30000		1500	
Estimator	×	F162	Magnetic Flux Estimator Bandwidth	1.0～20.0	Hz	3.0	P5-44
	×	F163	Speed Estimator Bandwidth	1.0～20.0	Hz	4.0	
	○	F164	Slip compensation Gain	10～200	%	100	
Speed PI control parameters (ASR)	○	F165	Scalar Speed Control P Gain	2～100	%	20	P5-45
	○	F166	Scalar Speed Control I Gain	0.0～100.0	%	50.0	
	○	F167	Low-speed Sensorless Speed Control P Gain	2～100	%	50	
	○	F168	Low-speed Sensorless Speed Control I Gain	0.0～100.0	%	50.0	
	○	F169	High-speed Sensorless Speed Control P Gain	2～100	%	30	
	○	F170	High-speed Sensorless Speed Control I Gain	0.0～100.0	%	30.0	
	×	F171	Low-speed magnetic-field magnification factor	100.0～180.0	%	140.0	P5-47
	×	F172	Magnetic-field magnification cut-off frequency	0.00～0.60	Pu	0.20	
	○	F173	Torque current Limit	0.000～1.250		1.000	
	×	F174	Torque Current Analog control source selection	0～5		0	
	0：Disabled 1：Digital operation panel AV		2：AV1 3：AV2	4：AI 5：External PID			
	×	F175	Torque control mode	0～1		0	P5-48
	0：Torque current limit		1：Torque current command (over-speed tripping)				
	×	F176	Torque control over-speed tripping frequency	0.0～400.0	Hz	60.0	P5-48

R : (○) denotes that performing to set up the function is permitted during operation.

9	R	Parameter	Description	Range	Unit	Ex-factory Setting	Page No.
Zero-speed positioning	×	F177	Close-loop vector control zero-speed positioning	0～2		0	P5-48
	0：Disabled 1：Zero-speed positioning 2：Pulse-wave frequency command position tracking						
	○	F178	Zero-speed positioning P gain	2.00～100.00	%	30.00	P5-48
	○	F179	Zero-speed positioning I gain	0.00～100.00	%	20.00	
Abnormality records	×	F180	Latest Abnormality Record	0～60		0	P5-49
	×	F181	Last Abnormality Record	0～60		0	
	×	F182	Last 2 Abnormality Records	0～60		0	
	×	F183	Last 3 Abnormality Records	0～60		0	
	Err 0 : Digital operation panel communication failure Err 1 : Over voltage(U1) or current(A1) in standby status Err 2 : Over voltage(U2) or current(A2) in acceleration Err 3 : Over voltage(U3) or current(A3) in deceleration Err 4 : Over voltage(U4) or current(A4) in speed regulation Err 5 : Heat sink overheated Err 6 : Dc Bus over voltage Err 7 : Dc Bus low voltage Err 8 : Electronic thermal relay action (Motor overload) Err 9 : AC Drive voltage not match the motor voltage Err 10 : Software-detected overload current protection Err 11 : AC Drive rated current range not match motor current Err 12 : Loss of output U-phase or U-phase C.T failure Err 13 : Loss of output V-phase or V-phase C.T failure Err 14 : Loss of output W-phase or W-phase C.T failure Err 15 : Reserved Err 16 : Encoder direction opposite to the phase sequence on the output side Err 17 : Encoder signal abnormality Err 18 : Parameter detection failure Err 19 : Position-tracking error greater then 40 turns Err 20 : Overload (150%, 60 seconds) Err 21 : PG off-line detection Err 22 : Break wire detected analog signals AI Err 23 : Absence of speed feedback affecting performance of closed loop control Err 24 : Torque control over upper limit of speed Err 25 : EEPROM parameter read back out of range Err 26 : Digital operation panel storage parameter write failure Err 27 : DSP storage parameter locked & preventing modification Err 28 : Operation panel storage parameter locked & preventing modification Err 29 : External input abnormality Err 30 : 3-phase current amplitude difference too big Err 31 : Current leakage or abnormal 3-phase current sum Err 32 : PUF fuse blown Err 33 : Power failure or too low mains input phase voltage Err 34 : Reserved Err 35 : Error in automatic operation time setup Err 36 : Digital input terminal setup repeated Err 37~60 : Reserved						
	×	F184	No. of auto-reset	0～10		0	P5-49
	×	F185	Abnormality Records Cleared	0～1		0	
	0：Not Cleared. 1： Cleared.						
External PID control	×	F186	PID mode	0～4		0	P5-51
	0：PID Disabled 2：PID Stop Setting Reserved 4：DI enabled (PID Stop Setting Reserved) 1：PID Stop Setting Zero-in 3：DI enabled (PID Stop Setting Zero-in)						
	×	F187	PI Target Value Input Options	0～8		0	P5-51
	0：PI initial value setup 3：AI input 6：RAMP output 1：AV1 input 4：Pulse Frequency command value 7：Total output current 2：AV2 input 5：Encoder (PG) feedback value 8：Torque current						

R : (○) denotes that performing to set up the function is permitted during operation.

10	R	Parameter	Description	Range	Unit	Ex-factory Setting	Page No.
External PID control	×	F188	PI Feedback point Options	0～8		0	P5-52
	0：PI initial value setup 1：AV1 input 2：AV2 input		3：AI input 4：Pulse Frequency command value 5：Encoder (PG) feedback value		6：RAMP output 7：Total output current 8：Torque current		
	×	F189	D input options	0～8		0	P5-52
	0：PI error 1：AV1 input 2：AV2 input		3：AI input 4：Pulse Frequency command value 5：Encoder (PG) feedback value		6：RAMP output 7：Total output current 8：Torque current		
	○	F190	PI Initial Value Setup	0.00～100.00	%	50.00	P5-53
	○	F191	D Input Filtration Time Setup	0.05～10.00	Sec.	0.20	
	○	F192	PID Output Limit	0.00～100.00	%	100.00	
	○	F193	Unit 1 Kp Gain	2.00～300.00	%	100.000	
	○	F194	Unit 1 Ki_H Gain	0.0～3000.0	%	400.0	
	○	F195	Unit 1 Ki_L Gain	0.0～3000.0	%	200.0	
	○	F196	Unit 1 Kd Gain	0.0～3000.0	%	20.0	
	○	F197	Unit 2 Kp Gain	2.00～300.00	%	100.00	
	○	F198	Unit 2 Ki_H Gain	0.0～3000.0	%	5.0	
	○	F199	Unit 2 Ki_L Gain	0.0～3000.0	%	5.0	
	○	F200	Unit 2 Kd Gain	0.0～3000.0	%	5.0	
	×	F201	Set the minimum working pressure	1.0～20.0	%	2.0	P5-55
	×	F202	Longest outage duration allowable(NO.2.31 Version)	0～5000	ms	0	P5-56
	×	F202	Reserved (NO.2.32 Version)	-32767～32767		0	
PC communication	×	F203	Ac Drive Communication Address	1～255		1	
	×	F204	PC transmission rate	0～4		2	
	0：2400	1：4800	2：9600	3：19200	4：38400		
	×	F205	Data Communication Data Format	0～3		0	P5-56
	0：8,N,1 RTU (1 start bit + 8 data bits + 1 stop bit) 1：8,E,1 RTU (1 start bit + 8 data bits + 1 Even bit + 1 stop bit) 2：8,0,1 RTU (1 start bit + 8 data bits + 1 Odd bit + 1 stop bit) 3：8,N,2 RTU (1 start bit + 8 data bits + 2 stop bits)						
	×	F206	Communication responsed time	3～50	ms	5	P5-56
	×	F207	Receive Failure Response	0～7		0	P5-57
	0：Normal Receiving 1：Function Code error 2：CRCL error		3：CRCH error 4：Packet Receiving Time Over 0.2 Seconds 5：Changing Parameter Not Permitted during Operation		6：Parametric value out of range 7：Parameter code error		

R : (○) denotes that performing to set up the function is permitted during operation.

11	R	Parameter	Description	Range	Unit	Ex-factory Setting	Page No.
Storage, recall parameters	×	F208	Recall Parameter	0～2		0	P5-65
	0：Not Recalled 2：Recall Parameters Saved in Digital operation panel 1：Recall Ex-factory Setup						
	×	F209	Copy & save the parameter in digital operation panel	0～1		0	P5-65
	0：Not Saved 1：Saved in Digital operation panel						
	×	F210	Lock up EEPROM Parameters	0～1		0	P5-65
	0：Save modified 1：Lock up Parameters						
	×	F211	Reserved 1	-32767～32767		0	
	×	F212	Reserved 2	-32767～32767		0	

Appendix D –Err Display–

Err Code	Description of Alarm Report
Err 0	Digital operation panel communication failure
Err(U,A) 1	Over voltage (Err U1) or current (Err A1)in standby status
Err(U,A) 2	Over voltage (Err U2) or current (Err A2)during acceleration
Err(U,A) 3	Over voltage (Err U3) or current (Err A3)during deceleration
Err(U,A) 4	Over voltage (Err U4) or current (Err A4)during speed regulation
Err 5	Heat sink overheated
Err 6	DC Bus over voltage
Err 7	DC Bus low voltage
Err 8	Electronic thermal relay enabled (Motor Overload)
Err 9	AC Drive voltage not match to the motor voltage
Err 10	Software detected overload current protection
Err 11	AC Drive rated current range not match motor current
Err 12	Loss of output U-phase or U-phase C.T failure
Err 13	Loss of output V-phase or V-phase C.T failure
Err 14	Loss of output W-phase or W-phase C.T failure
Err 16	Encoder direction opposite to the phase sequence on the output side
Err 17	Encoder signal abnormality
Err 18	Parameter detection failure
Err 19	Position-tracking error greater than 40 turns

Err Code	Description of Alarm Report
Err 20	Overload (150%,60 Sec.)
Err 21	PG off-line detection
Err 22	Break wire detected analog signals AI
Err 23	Absence of speed feedback affecting performance of closed loop control
Err 24	Torque control over upper limit of speed
Err 25	EEPROM parameter read back out of range
Err 26	Digital operation panel storage parameter write failure
Err 27	DSP storage parameter locked and preventing modification.
Err 28	Operation panel storage parameter locked and preventing modification
Err 29	External input abnormality
Err 30	3-phase current amplitude difference too big
Err 31	Current leakage or abnormal 3-phase current sum
Err 32	PUF fuse blown
Err 33	Power failure or too low mains input phase voltage
Err 35	Error in automatic operation time setup.
Err 36	Digital input terminal setup repeated.
Err 15、 Err 34、 Err 37～Err 60 Are signals reserved for failure.	

Digital operator (KP-AD20)

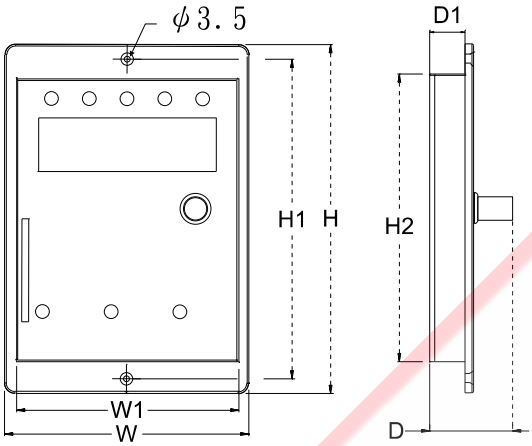

(Figure A)

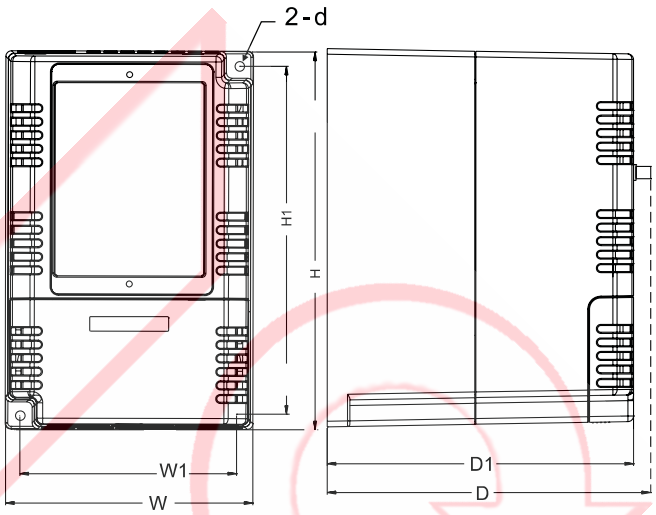

(Figure B)

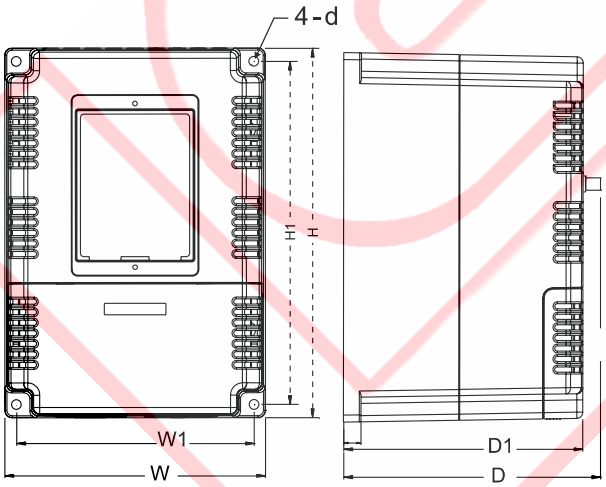

(Figure C)

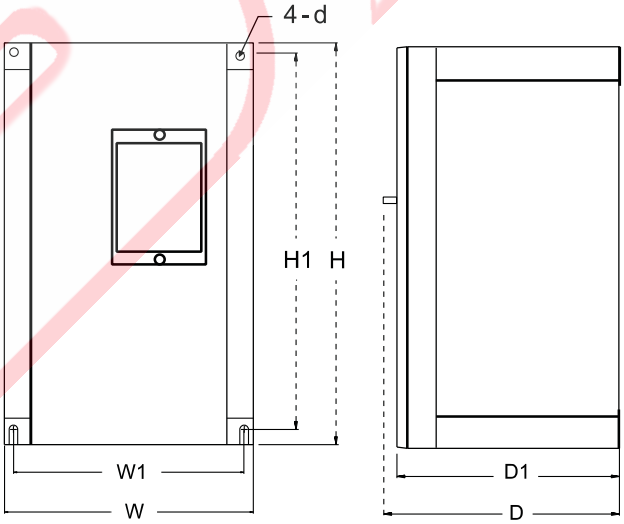

(Figure D)

-Dimensional drawing of mechanism-

Roughing-in dimensions and mounting dimensions

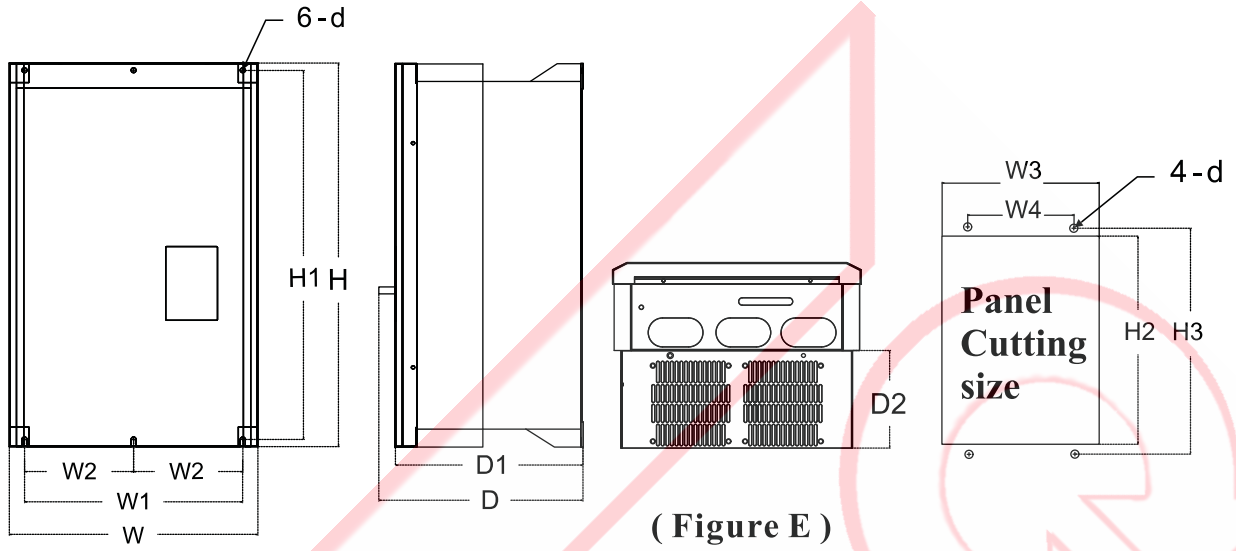

(Figure E)

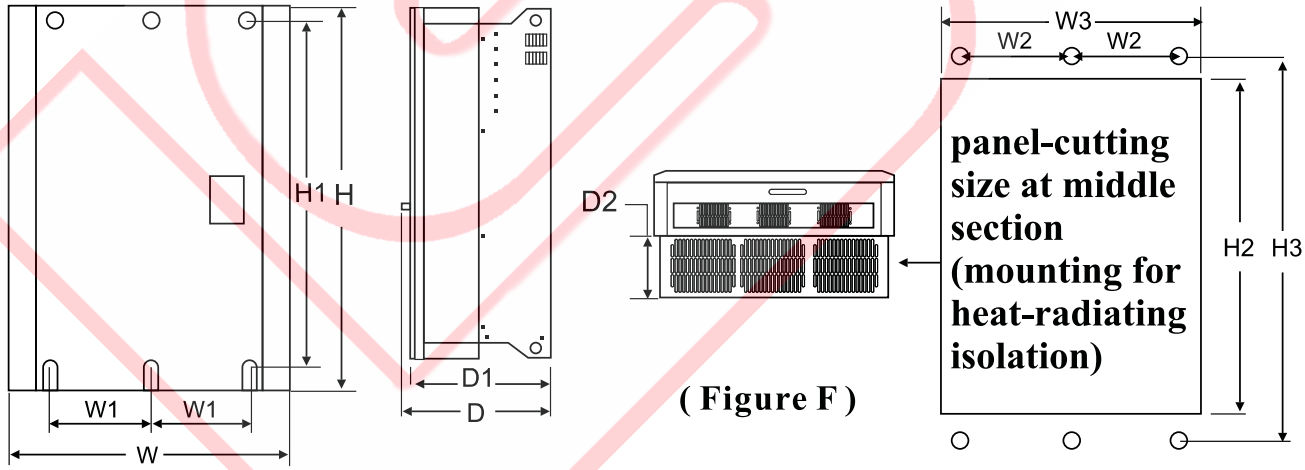

(Figure F)

※ Dimensions shown in the figures above are for reference only.
Please refer to the latest catalogue for the updated dimensions.
We reserve the right to change the dimensions without notice.

200V class series

Applicable motor capacity	Roughing-in dimensions (mm)			Constant dimensions (mm)				ψ	Holing, constant dimensions (mm)					Drawing No.
(HP)／(KW)	W	H	D	W1	W2	H1	D1	d	W3	W4	H2	H3	D2	
KP-AD 20	70.9	102	25.8	—	—	93	15.8	3.5	65.3	—	84.5	—	—	A
0.5 / 0.4	114	172	146	101	—	159	136	5.3	—	—	—	—	—	B
1 / 0.75														
2 / 1.5														
3 / 2.2	152	214	146	137.5	—	200	136	5.3	—	—	—	—	—	C
5 / 3.7														
7.5 / 5.5	188	300	180	170	—	283	170	7	—	—	—	—	—	D
10 / 7.5														
15 / 11														
20 / 15	250	458	227	218	—	401	217	7	242	170	445	460	112	E
25 / 18														
30 / 22														
40 / 30	345	563	272	305	152.5	515	262	7	330	212	546	568	140	
50 / 37														
60 / 45														
75 / 55														
100 / 75	604	770	322	262.4	220	749.5	312	7	582	—	745	770	158	F
125 / 90														
150 / 110														

400V class series

Applicable motor capacity	Roughing-in dimensions (mm)			Constant dimensions (mm)				ψ	Holing, constant dimensions (mm)					Drawing No.
(HP)／(KW)	W	H	D	W1	W2	H1	D1	d	W3	W4	H2	H3	D2	
KP-AD 20	70.9	102	25.8	—	—	93	15.8	3.5	65.3	—	84.5	—	—	A
0.5 / 0.4	114	172	146	101	—	159	136	5.3	—	—	—	—	—	B
1 / 0.75														
2 / 1.5														
3 / 2.2	152	214	146	137.5	—	200	136	5.3	—	—	—	—	—	C
5 / 3.7														
7.5 / 5.5	188	300	180	170	—	283	170	7	—	—	—	—	—	D
10 / 7.5														
15 / 11														
20 / 15	250	458	227	218	—	401	217	7	242	170	445	460	112	E
25 / 18														
30 / 22														
40 / 30														
50 / 37	345	563	272	305	152.5	515	262	7	330	212	546	568	140	
60 / 45														
75 / 55														
100 / 75														
125 / 90	604	770	322	262.4	220	749.5	312	7	582	—	745	770	158	F
150 / 110														
175 / 132														
200 / 160														
250 / 185														
300 / 220														
400 / 320														
500 / 375														

LONG SHENQ ELECTRONIC CO., LTD.

NO. 12-2, WULIN STREET, SHULIN CITY, TAIPEI COUNTY,
TAIWAN, R.O.C (Shulin Industrial Park)
Tel：02-2684-2888(4 lines)
Fax：02-2684-2889 . 2684-2886

All the products are constantly modified thereof specifications to improve the perfection; for downloading the latest version of specifications, please visit Long Shenq website **http : //www.acinverter.com.tw/.**

⋇ The company reserves the right to modify the models and specifications without notice.
Copyright and all rights are reserved. No part of this publication may be reproduced in any form.