800 Model

AC DRIVE

Application Manual

Sensorless & Closed Loop

SUITABLE MODEL : THREE PHASE 200V~240V/380V~460V CLASS

PREFACE

More and more applications of ac drive are commercially used today as automated process operation becomes popular. Based on our professional commitments by focusing on modern technologies and pushing for the latestry industry standards, we attach this manual of our high performance ac drive. This manual contains detailed instructions on installation (including operation, maintenance, inspection, and repair), peripheral wiring, specifications, and parameter setup process, and gives you complete description of types and technical operation of the product.

To help you complete the installation setup in a systematic and efficient way, a summary process flow chart is given in the title "Commissioning" for you to skip over otherwise complicated setup procedures while saving your time in working out the proper installation.

Thank you for having our LS800 Series current flux vector drive, one that has incorporated the advanced IGBT Module mute design and decades of our expertise to yield the optimal economic benefits for your from your production facilities.

STATEMENT OF SAFETY

- Read this manual before installation, wiring, operation, maintenance, inspection, and repair, and follow the appropriate instructions. For any doubt, consult with us, or local dealer.

- To prevent any personal injury or property loss due to accident, strictly comply with warning, notice, and danger marks and prompts following those marks.

- Place this manual in locations where permits easy access is allowed for the operators to refer to.

DESCRIPTION OF MARKS

CAUTION

CAUTION To warn that any act of omission to the instructions following this mark may cause personal injury.

WARNING

WARNING To warn that any act of omission to the instructions following this mark may cause personal injury and property loss.

INHIBIT

RESTRICTED To warn that any act of omission or violation against the instructions following this mark may cause personal injury and property loss.

- This product has survived strict QC, and provided with reinforced packing materials before leaving our factory to ensure free of any unexpected impact or damage during the shipment.

- Operators referred in this manual include qualified technicians of service and installation, those who are familiar with technologies involved, and operating employees.

CAUTIONS

- Each unit of ac drive has been ex-factory set, never modify the setup of internal parameters at own discretion unless absolutely necessary. Please confirm first the safety allowance to the motor or the mechanical system before operation or in case that the output frequency must be set at 60 Hz or higher.
- Only qualified technician is allowed to operate this ac drive. The qualified technician to this purpose is referred to one who is familiar with the internal construction, installation procedure, operating method, and service steps of the ac drive; and who also knows how to practise safety measures to prevent any hazard and/or accident.
- Before installing the ac drive, check the environment of the installation site to see if it is proper for the installation. If yes, firmly secure the ac drive to a flat and smooth cement or metal plate wall, properly guarded from impact by foreign object that may damage the ac drive.
- Addition of blowing fans is a must to ensure that the temperature of the incoming air will not rise to such an extent that may affect the operation of multiple ac drives installed in the same control panel.
- Check all the wires connected to each terminal block are firmly secured, and all grounding terminals on ac drive and on motor are properly earthed.
- Before operating, always confirm if the voltage from the power source complies with the rated voltage of the ac drive; and check for correct wiring to any brake controller or brake resistance, if provided.
- Whereas, VDC of the primary loop in the ac drive is as high as 650 VDC (400V Class)/325 VDC (200V Class), never use your hand to direct touch any loop in the ac drive to avoid electric shock. Do not remove the protection lid when the loop is conducted. Make sure to kill the source, wait for the CHARGE indicator to go off, and verify using a multi-meter the absence of VDC between N、P terminals before performing any service or inspection job.
- Terminals inside the ac drive when not in operating status may carry dangerous voltage. Never touch the terminal block of the ac drive with bare hands. To perform any wiring inspection and service routines, always wait for five minutes or longer after the power source is turned off and after the CHARGE indicator goes off.
- If the ac drive is expected not to use for a longer period, make sure that the power supply to the ac drive is cut off, and measures offending off dust and humidity are in place to avoid unnecessary replacement of parts in future use.

TABLE OF CONTENTS

IV. Commissioning

V. Description of Parameter Functions

TABLE OF CONTENTS

I Installation

Installation

First-time Use

Thank you for selecting our Series 800 ac drive. Please confirm the following matters before installation.

If description and specification of the Product received are the same as that you have ordered ?

Check upon the nameplate found on the side of the product if the specification complies with that you have ordered.

Any damage ?

Check the appearance for any damage to the product, such as ingression of water, damaged package or dents on the machine during transportation.

Is there any loosening lid/screw ?

Confirm the torque using a screw driver if required.

WARNING

Upon receiving Series 800 ac drive, check for correct voltage, specification, and capacity. Any mistake in the voltage class may lead to burnt-out of the drive, and personal injury or fire hazard in serious case.

Installation Site Setup & Control

Installation Site

INHIBIT

The installation site shall be far away from the following location

- Inflammable materials, e.g., wood;
- Dust, metal powder, and oil stain;
- Radioactive substance, and EMI;
- Corrosive gases, liquids, and are prone to water leakage, and high humidity;
- Vibration, such as having the ac drive installed at where attached to any machine vulnerable to vibration;
- Where exposed to direct sunshine, or at an ambient temperature lower than -10°C or higher than 40°C; and
- Any location at a sea level of 1000m or higher.

WARNING

Avoid installation or placement of the ac drive in any of those locations described above since severe environment will subject the ac drive to failure, damage, deterioration, or even fire hazard.

Temperature & Humidity

Type of nstallation	Ambient	Ambient Humidity
Closed Wall Mounting	−10 ~ +40°C	95% RH or less (non-condensation)
In Panel Mounting	−10 ~ +45°C	95% RH or less (non-condensation)

∗ For reference only in environment impact assessment of the installation!

Description of Nameplate：

Found on one side of the ac drive, the nameplate bears model, specification, protection class and other information as described below.

Model No. →	MODEL	： LS800-22K2
Input Spec. →	INPUT	： AC 3Ph 200~240V 50/60Hz
Output Spec. →	OUTPUT	： AC 3Ph 0 ~240V 4.2KVA 11.0A cont 17.0A int 2.2kW 3Hp
Protection Class →	PANEL.	： IP20 NEMA 1
Manufacturing Series No. →	S/NO	： 0410A00001

Description of Model on the Nameplate of the Drive:（MODEL）

LS800－22K2

- LS800: AC Drive Model No.
- 2: 2：input 200V~240V; 4：input 380V~460V
- K2: Power : 2.2kW

LS800 － 4 0K4

- LS800: AC Drive Model
- 4: Voltage Class 2 = 200~240V; 4 = 380~460V
- 0K4: Output capacity

0K4 = 0.4KW	015 = 15KW
0K7 = 0.75KW	018 = 18KW
1K5 = 1.5KW	022 = 22KW
2K2 = 2.2KW	030 = 30KW
4K0 = 4.0KW	037 = 37KW
5K5 = 5.5KW	045 = 45KW
7K5 = 7.5KW	055 = 55KW
011 = 11KW	075 = 75KW

Identification of Special Model:

LS800 － 2 0K4 XX

- LS800: AC Drive Model
- 2: Voltage Class 2 = 200~240V; 4 = 380~460V
- 0K4: Output Capacity
  - 0K4 = 0.4kW
  - 0K7 = 0.7kW
  - 1K5 = 1.5kW
  - 2K2 = 2.2kW
- XX: Special Version

Designations of Parts

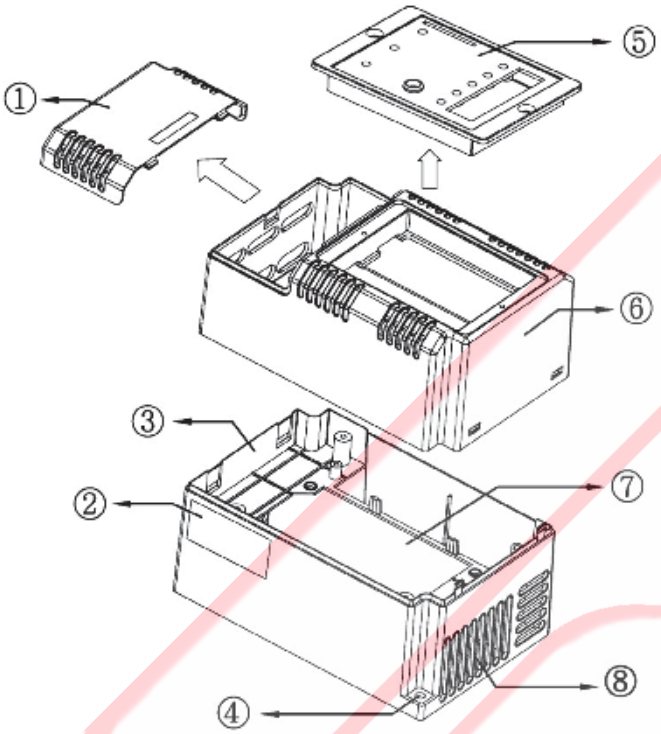

① Terminal Block Lid
② Specification Nameplate
③ AC Drive Base
④ Locking Screw Hole
⑤ Keyboard Panel
⑥ AC Drive Lid
⑦ Heat Sink Location
⑧ Heat Sink Vent

High HP Box

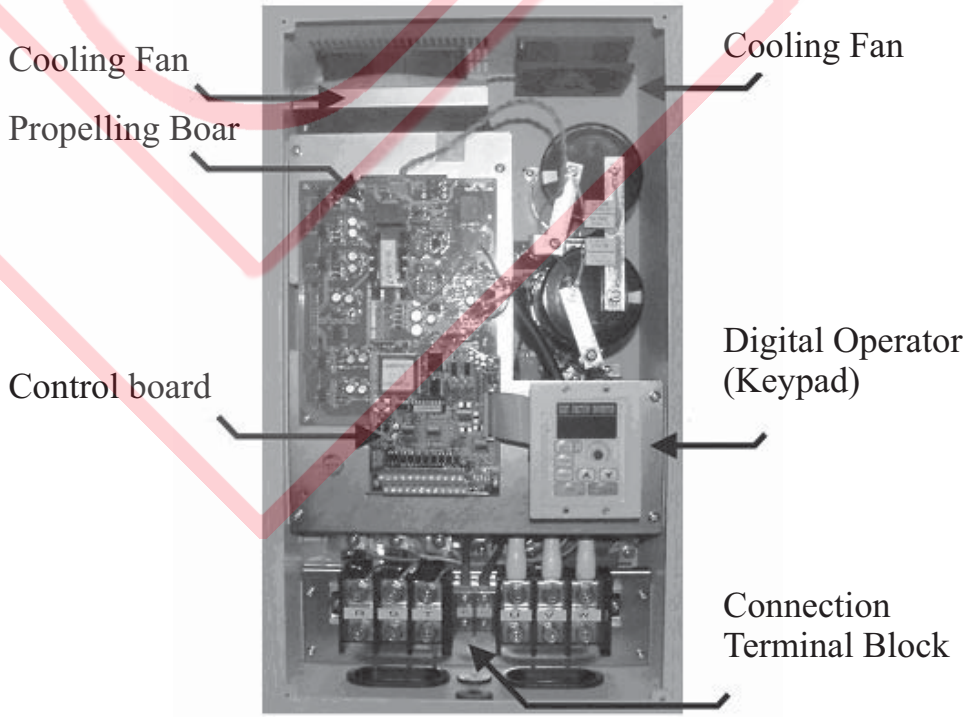

Removing the AC Drive Lid

0.5HP～5.0HP

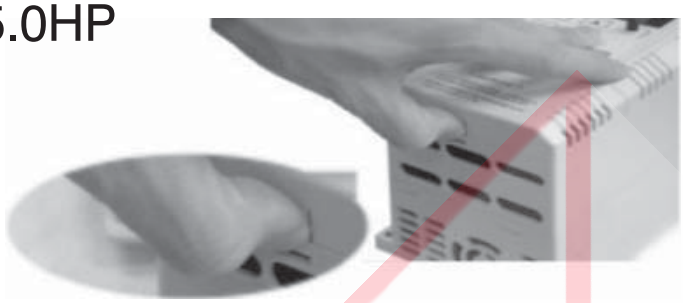

Step 1: Have one thumb to slightly push in the locking button.

Step 2: Lift the lid to remove the terminal.

Step 3: To remove the lid for service, have both thumbs to press and push up both (LH & RH) locking rings.

Step 4: Hold and lift to remove the entire lid

5.5HP ~ 50HP

Step 1 : Push up the panel

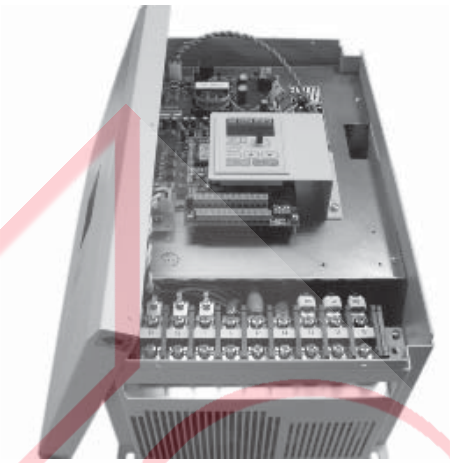

Step 2 : Lid is removed

60HP ~ 100HP

Step 1 : Remove first the screws(X4)

Step 2 : Carefully remove the panel

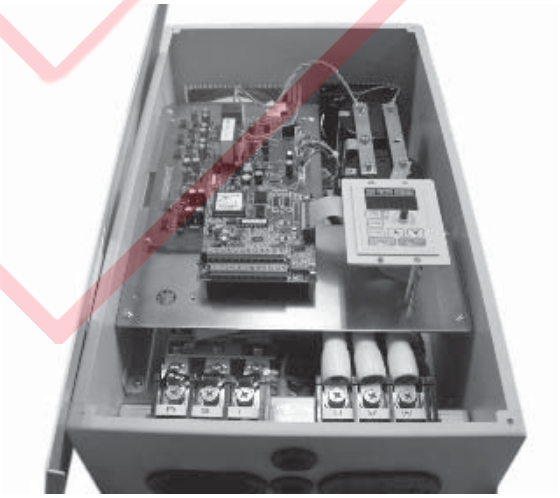

Step 3 : Lid is removed

Installation Direction & Space

To maintain good cooling air circulation, the ac drive must be secured in vertical position leaving sufficient clearance between the ac drive and its surrounding, and abutted components and guards. Whereas cooling fans are mounted at the base of the ac drive, sufficient space shall be maintained to facilitate air ventilation.

Notices to Installation

（1）If the ambient temperature maintains at 40°C or higher, install the ac drive at Where well ventilated or improve external cooling system.

（2）Whereas transient temperature rise may take place if additional brake resistance is installed, select carefully the installation site for the brake resistance, or additional fans are provided to help heat dissipation.

（3）Installation site should be well ventilated and kept far away from inflammables.

（4）Determine the minimum clearance between the body of the ac drive and the wall according to the model of the ac drive and the number of horsepower。

CAUTION

After removing the power source, wait for five minutes or longer to allow the internal capacitor to complete discharging before opening up the lid.

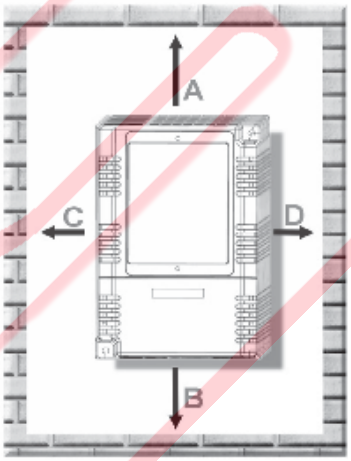

Minimum In-panel Installation Clearance
(Refer to Chart and Table)

Direction & Safety Clearance / LS800 Capacity	A	B	C	D
≤ **2.2kw**	≥ 100 mm	≥ 100 mm	≥ 50 mm	≥ 50 mm
4.0kw ~ 11kw	≥ 120 mm	≥ 120 mm	≥ 50 mm	≥ 50 mm
15kw ~ 22kw	≥ 150 mm	≥ 150 mm	≥ 100 mm	≥ 100 mm
30kw ~ 37kw	≥ 200 mm	≥ 200 mm	≥ 150 mm	≥ 150 mm
45kw ~ 75kw	≥ 300 mm	≥ 300 mm	≥ 200 mm	≥ 200 mm

II Wiring

Schematic View of Peripheral Configuration

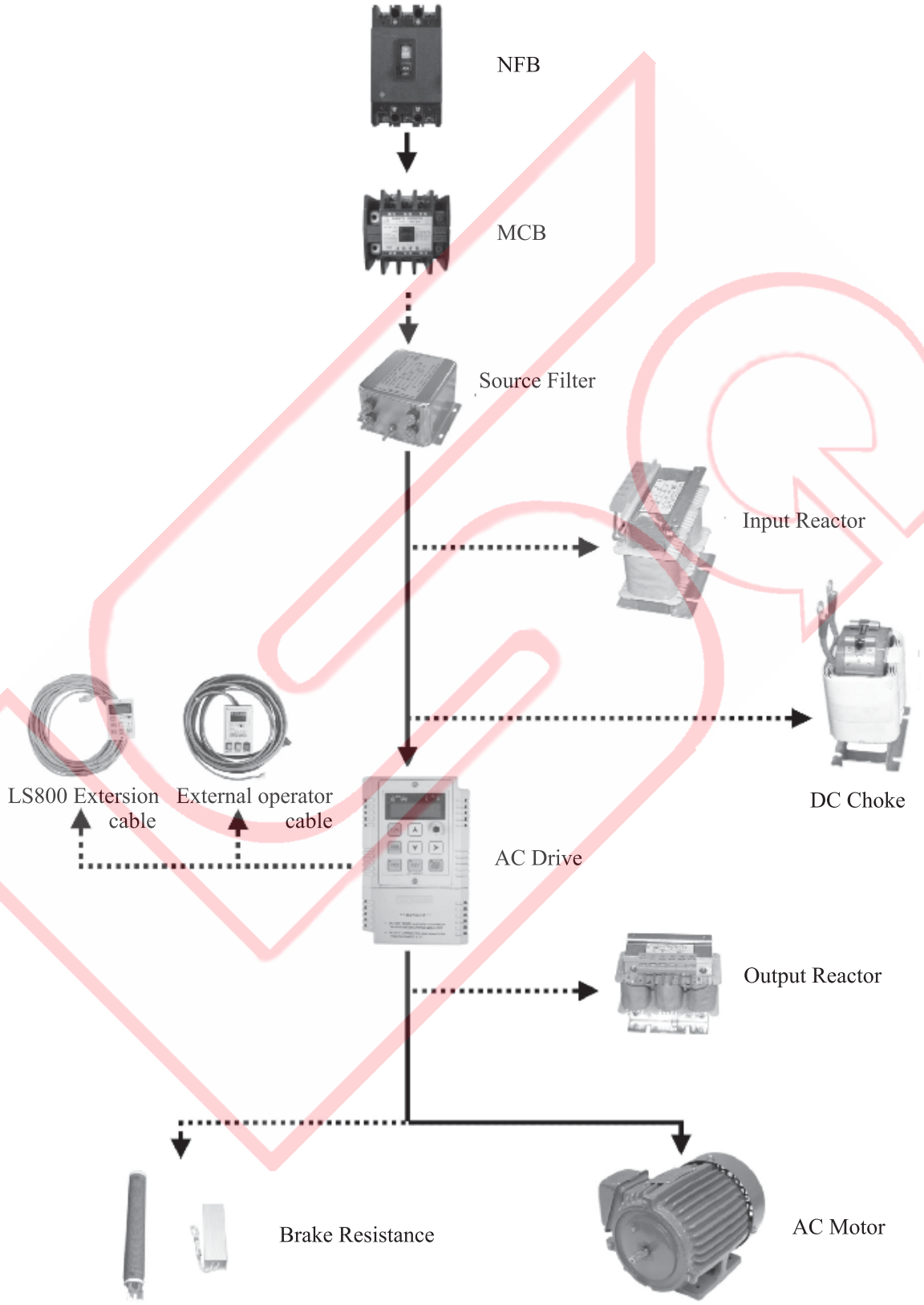

Connection to Peripherals

Wiring Methodology

3-Phase Primary Loop Wiring Diagram

(LS800-20K5、LS800-20K7、LS800-21K5、LS800-22K2、LS800-24K0、LS800-25K5、LS800-27K5、LS800-40K7、LS800-41K5、LS800-42K2、LS800-43K7、LS800-45K5、LS800-47K5)

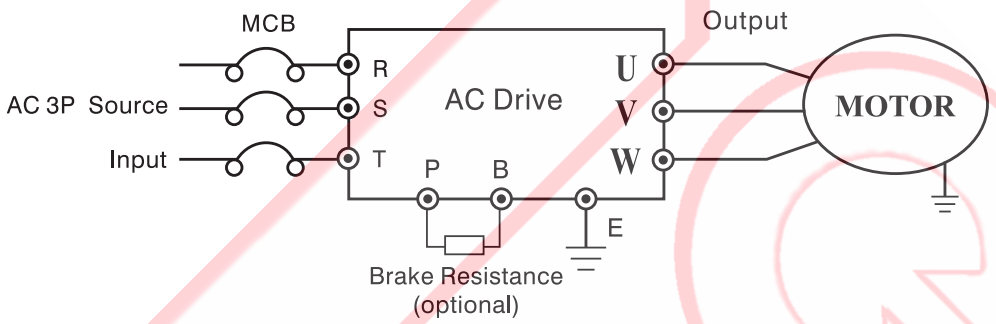


CAUTION

(1) A brake circuit is provided up to 10HP for 3p Series 200V and 400V. Refer to P. 8-1 for selecting correct resistance and wattage.
(2) Each frequency ac drive and motor casing must be properly grounded to prevent lightening and electric shock.

3 Phase Source Terminal Block

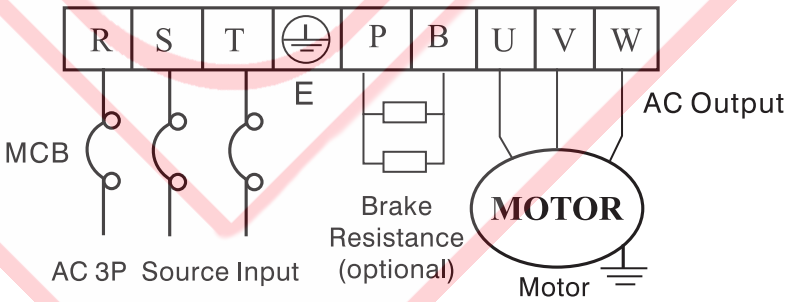

Symbol	Description
R.S.T	Connecting 3p source input
P.B	May be connected to brake resistance; no external brake unit is required for less than 10HP, which is built in.
U.V.W	Output to connect 3p motor terminal
⏚	Grounding terminal

3-Phase Primary Loop Wiring Diagram

(LS800-2011、LS800-2015、LS800-2018、LS800-2022、LS800-2030、LS800-2037、LS800-2045、LS800-2055、LS800-4011、LS800-4015、LS800-4018、LS800-4022、LS800-4030、LS800-4037、LS800-4045、LS800-4055、LS800-4075)

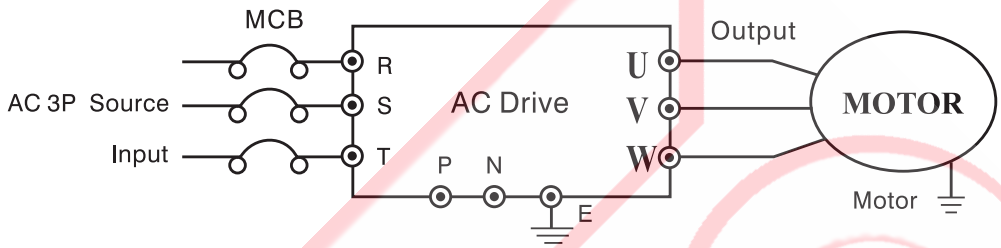


CAUTION

(1) A brake circuit is not provided for 3p Series 200V and 400V of 15HP or greater. Refer to P. 8-1 for selecting correct braking unit resistance and wattage.
(2) Each ac drive must be properly grounded to prevent lightening and electric shock.

R-3p Source Terminal Block

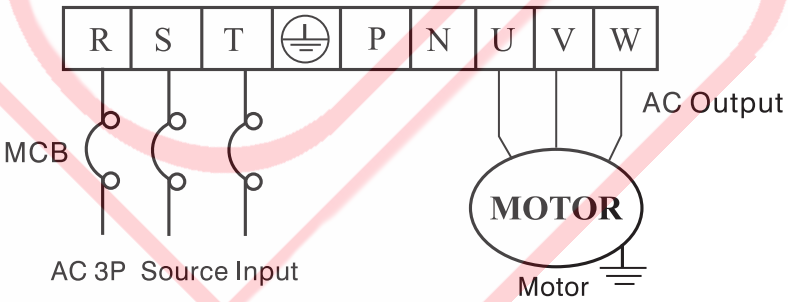

Symbol	Description
R.S.T	Connecting 3p source input
P.N	P(+), N(-) terminals may be connected to external brake unit, but direct connection to brake resistance is not acceptable.
U.V.W	Output to connect 3p motor terminal
⏚	Grounding terminal

Notices to Wiring

(1) Primary Loop Wiring

1. Make sure that the connections for source input terminals R.S.T, and output terminals U.V. W (to be connected to the motor) are correct; any mistake in the connection would lead to serious damage to the ac drive.
2. Never connect any power factor capacitor, or LC, RC noise filter to the output end of the ac drive.
3. Keep the primary loop wiring of the ac drive far away from signal cable of any other control system (e.g., PLC, tiny signal system) to avoid interference.

(2) Ground wire

1. Connect the ground terminal ⏚ in the third type grounding method (≤10Ω).
2. Avoid sharing the grounding electrodes and ground wire with other power facilities including the welding machine and dynamo-machines. Keep the ground wire far away from the power cable of large capacity equipment as applicable.

(3) EM Contact – Breaker Used in Primary Loop Wiring

To protect the loop, NFB, or an additional EM contact must be provided between the primary loop AC source and LS800 input terminals R.S.T. on the power side.

∗ Use of Leakage Breaker:

1. When a leakage breaker switch dedicated for the ac drive is used, select the one with an induced current of 30mA or greater for each unit of ac drive.
2. If a general leakage breaker switch is used, select the one with an induced current of 200mA or greater for each unit of ac drive, and the time of action shall not be shorter than 0.1 s.

(4) Surge Absorber

Any windings of the peripheral, e.g., EM contact, relay, solenoid to the ac drive must be connected in parallel with the surge absorber to prevent noise interference. Select the surge absorber by referring to the list given below：

Voltage	Where Needed	Spec. of Surge Absorber
220V	Large capacity windings other than relay	AC250V 0.5uf 200Ω
	Control relay	AC250V 0.1uf 100Ω
380V	Large capacity windings other than relay	AC500V 0.5uf 220Ω
	Control relay	AC500V 0.1uf 100Ω

Primary Loop & Control Loop Routings Comparison List

CAUTION

◎ Before wiring, confirm that the source voltage must comply with the rated input voltage of the ac drive.

◎ Select the proper specification of the terminal screw and the size of the wire as provided in Electrician Code, and firmly tighten up the screw.

WARNING

◎ The wiring on the side of the source input terminals (3p/R.S.T) will not affect the phase sequence; however, phase sequence exists when any two terminals of U.V.W. on the output side are changed and that will affect the revolving direction of the motor.

◎ The wiring operation for the ac drive must be done only after the power source is cut off for operation safety.

◎ Install a no-fuse switch MCB to the source input side for power on/off operation and protecting the input end of the ac drive.

◎ Properly connect the ground wire to avoid possible electric shock or fire disaster.

Form (1) 200V ~ 240V

Spec. / Description	20K4	20K7	21K5	22K2	24K0	25K5	27K5	2011	2015	2018	2022	2030	2037	2045	2055
Capacity kw/HP-200V	0.4 / 0.5	0.75 / 1	1.5 / 2	2.2 / 3	3.7 / 5	5.5 / 7.5	7.5 / 10	11 / 15	15 / 20	18.5 / 25	22 / 30	30 / 40	37 / 50	45 / 60	55 / 75
3p MCB Rated Current (A)	5	10	15	20	30	50	60	75	125	150	175	225	250	300	400
Power wire gage (mm^2)	2.0			3.5		5.5	8.0	14	22	30	38	50	60	80	100
Primary loop screw	M4					M5		M6				M8		M10	
Control loop wire gage (mm^2)	1.25mm^2														

Form (2) 380V ~ 460V

Spec. / Description	40K7	41K5	42K2	44K0	45K5	47K5	4011	4015	4018	4022	4030	4037	4045	4055
Capacity kw/HP-400V	0.75 / 1	1.5 / 2	2.2 / 3	3.7 / 5	5.5 / 7.5	7.5 / 10	11 / 15	15 / 20	18.5 / 25	22 / 30	30 / 40	37 / 50	45 / 60	55 / 75
3p MCB Rated Current (A)	5	10	15	20	30		50	60	100		125	150	175	200
Power wire gage (mm^2)	2.0			3.5		5.5	8.0		14		22	38		50
Primary loop screw	M4				M5		M6				M8		M10	
Control loop wire gage (mm^2)	1.25mm^2													

Control Terminal Block Location Reference Chart

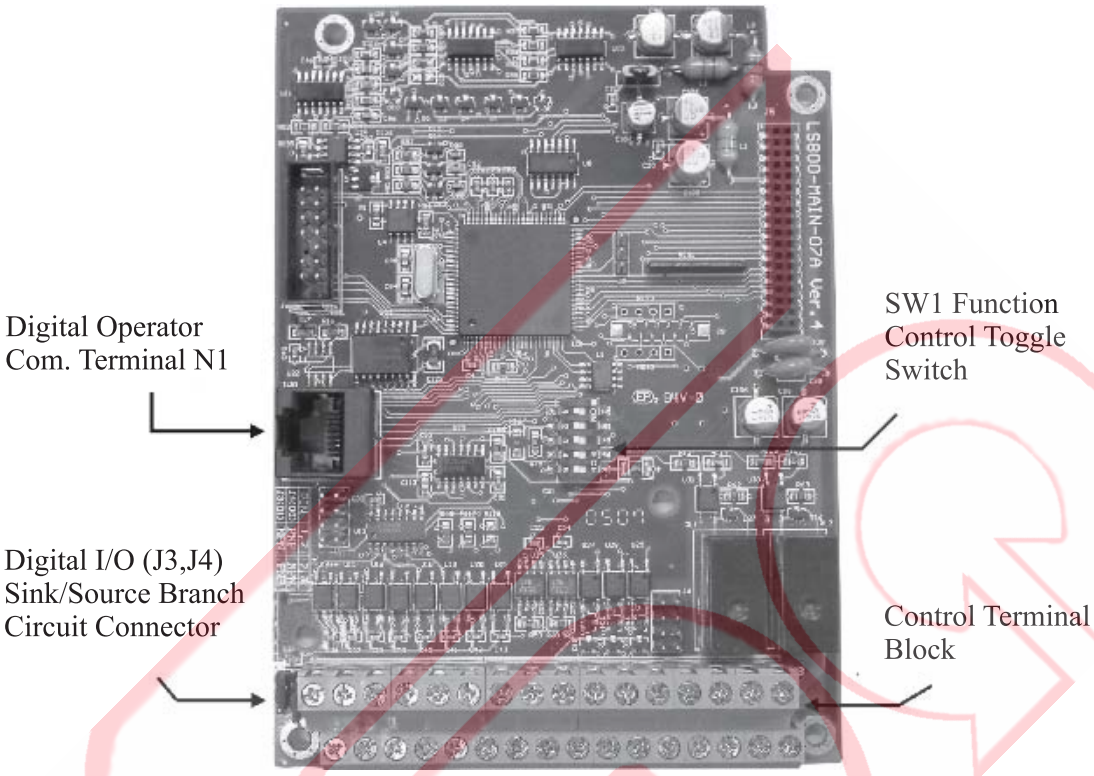

LS800 Motherboard

Caution: (Note 1) Only a single unit of loop is allowed to start for use since the digital operator related to an internal communication mode and the external communication mode for SG-, SG+ are of different active and passive communication modes, thus are prevented from being connected for use at the same time.

◆ J3, J4 Sink/Source Branch Circuit Connector

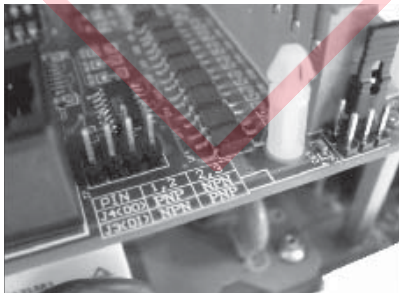

1. After completing the adjustment with J3 and J4, the logic of the I/O terminals may be switched into Sink Mode and Source Mode.
2. A detailed equivalent schematic view is given on P. 2-11.

◆ SW1 Function Toggle SW

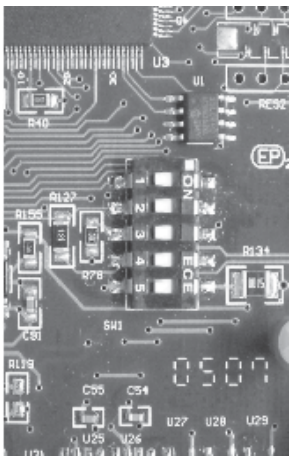

Description of SW1 Functions (RS485 Modbus set for internal and external uses).

NO.	Function	Toggle SW ON		Ex-factory Setup
1	SG-	External signal output to terminal block SG- (N1)		OFF
2	SG+	External signal output to terminal block SG+ (N1))		OFF
3	485 SW	**OFF** – internal digital operator in RS485 communication format (N2) **ON** – external digital operator in RS485 Modbus communication format.		OFF
4	120Ω Terminal R	Terminal R for internal and external RS485		ON
5	To set up V or A input mode to be inputted by AI terminal	OFF	ON	ON
		V Mode 0~10V	A Mode 0~20mA	

Note: External signals are for RS485 Modbus signal with SG- and SG+ input to the terminal block for external monitor with sources from PLC, or computer.

Note: The internal digital operator relates to the operation and control carried out by panel pushbuttons .

◆ Digital Operator Comm. Connector Spec.

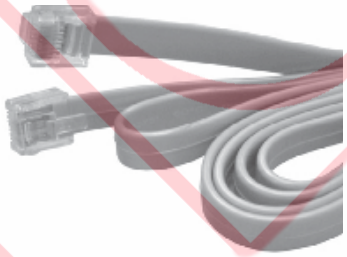

1. RJ45: a short connector as illustrated to the left, instead of the universal one generally available in the market.

◆ Control Terminal Block

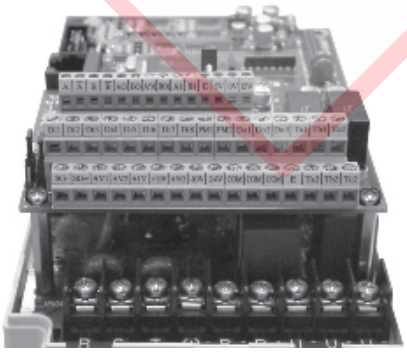

1. Use type "－" or "＋" (#101 screwdriver) to loosen up the terminal screw on the terminal block. Insert the wire from where below the terminal block and tighten up the screw (Refer to P2-8 in wiring on the terminal block.

2. Functions of the control terminal block and PG-AB2 terminals are respectively given in P2-9, and P2–13.

Connecting Control Circuit Terminals

Notices to Control Circuit Wiring

WARNING

Separation mesh connection must be provided between the control loop wiring and the terminal block and earthed. Improper wiring will cause serious interference and abnormal operation resulting in accident, personal injury and property loss.

- ☑ For safety concerns, select the proper wire gage according to Electrician Code.
- ☑ For overseas client, provide the wiring according to the applicable electric wiring regulations of the native country.
- ☑ Control circuit wiring: Provide the control circuit wiring only after the primary circuit wiring is separated from other power or electricity cable. Make it a 90-degree crossover at where alternative connection warrants.
- ☑ Communication cables for all I/O control signals or remote digital operation setup unit must be separated far away from large current power cables (source, motor, brake) as applicable, and shall never be provided in the same trunking.
- ☑ As long as the digital operator indicator is on, never attempt to connect or disconnect any cable.
- ☑ Make sure that the screws to the primary loop terminals are properly tightened up to prevent sparks generated by loosening screw due to vibration.
- ☑ Please refer to the list given below for the clearance between the source input and output wirings of the ac drive.

	Wiring Standard Length	Wiring Length Limit
Source system→ Source end of the ac drive	Within 2~30M	Within 20~300M
Output end of the ac drive → AC electric machinery connection end	Within 2~25M	Within 25~200M
In case of excessive wiring	Recommended installation of I/O reactor	Mandatory installation of I/O reactor

WARNING

Excessive length of power cable will cause parasitic capacitance created at the electric machinery and power cable to the ground, resulting high voltage surge to directly damage the ac drive.

Schedule of Control Terminal Function

Terminal Mark		Terminal Designation	Description		Remarks
Multi-function Input Terminals	Di1	Forward revolution command	Forward revolution when Di1-COM is ON; and stop, OFF		Control
	Di2	Reversal revolution command	Reversal revolution when Di2-COM is ON; and stop, OFF		Control
	Di3	Input in case of external abnormality (NC)	AC Drive trips off to stop when external abnormality signal is ON. (Err 29)		Control
	Di4	Abnormality reset	The status retained when reset to ON to release failure in order to protect loop		Control
	Di5	Multi-section command 1	To execute four-section speed control with binary 2Bit.		Control
	Di6	Multi-section command 2			Control
	Di7	Jog inching frequency	To execute inching frequency when ON		Control
	Di8	Free-run	When activated (ON), the drive immediately stops outputting.		Control
	COM	I/O Common terminal	Terminal common by multi-function I/O) terminals and pulse FM terminals		Common Point
Analog F Setting	+10V	Source for F setup	Source output DC+10V for frequency setup (maximal 10mA allowed)		Source
	-10V	Negative source for F setup	Auxiliary negative source output DC-10V for F setup (maximal –5mA allowed)		Source
	AVG	Common terminals for F setup	Common reference potential terminal for F setup input signals (terminal AV1.AV2.AI)		Common Point
	AV1	Analog voltage F command	With input voltage at DC0~±10V (or DC0~+10V), the input impedance is 15kΩ		Signal sourc
	AV2	Analog voltage F command	With input voltage at DC0~+10V, the input impedance is 30kΩ		Signal sourc
	AI	Analogy current F command	With input current at DC0~20mA, the input impedance is 500kΩ (or DC0~+10V, 30KΩ)		Signal sourc
Multi-function Output Terminals	DO1	Zero-Speed detected	ON in stop status or below zero-speed level		Control
	DO2	Consistent F	ON when the output F at any setting is over the detected F.		Control
	DO3	Overload forecast	On when the drive detection output is over the OL level		Control
	COM	I/O Common terminal	Terminal shared by multi-function I/O) terminals and pulse FM terminals		Common Point
	24V	Auxiliary source for terminal	Auxiliary source 24V/200mA MAX. for I/O terminals		Source
	Ta1	Output in normality (NC) 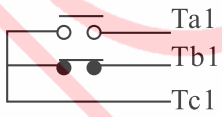	1a and 1b contacts function to output when the abnormality protection mechanism of the drive is activated.		Contact
	Tb1		∗Ta1-Tc1 is ON in case of abnormality Contact	Contact Capacity: AC250V 1A DC30V 1A	Contact
	Tc1		∗Tb1-Tc1 is OFF in case of abnormality Contact		
	Ta2	In Operation 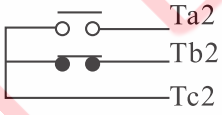	1a and 1b contacts function to output when the F to activate the output of ac drive is above the value as preset.		Contact
	Tb2		∗Ta2-Tc2 is ON during operation Contact	Contact Capacity: AC250V 1A DC30V 1A	Contact
	Tc2		∗Tb2-Tc2 is OFF during operation Contact		
	FM1	Analog output, FM	Multi-function analog monitor 1, DC0~10V/100% FM meter head		Signal
	FM2	Analog output, amperage monitor	Multi-function analog monitor 2, DC+~+10V/100% ac drive rated A.		Signal
COM	SG+	RS-485 series com interface	RS-485 series com jack, positive end input		COM
	SG-	RS-485 series com interface	RS-483 series com jack, negative end input		COM
	E	Earth cable terminal	Exclusively for the shielded cable to connect the selected earth shielded cable use.		Earth


CAUTION


INHIBIT

Whereas the control block is characterized by empty contact, no signal source carrying voltage should be inputted; otherwise, the ac drive will be damage.

Control Circuit Wiring Diagram

AC Drive Control Circuit Terminal Wiring

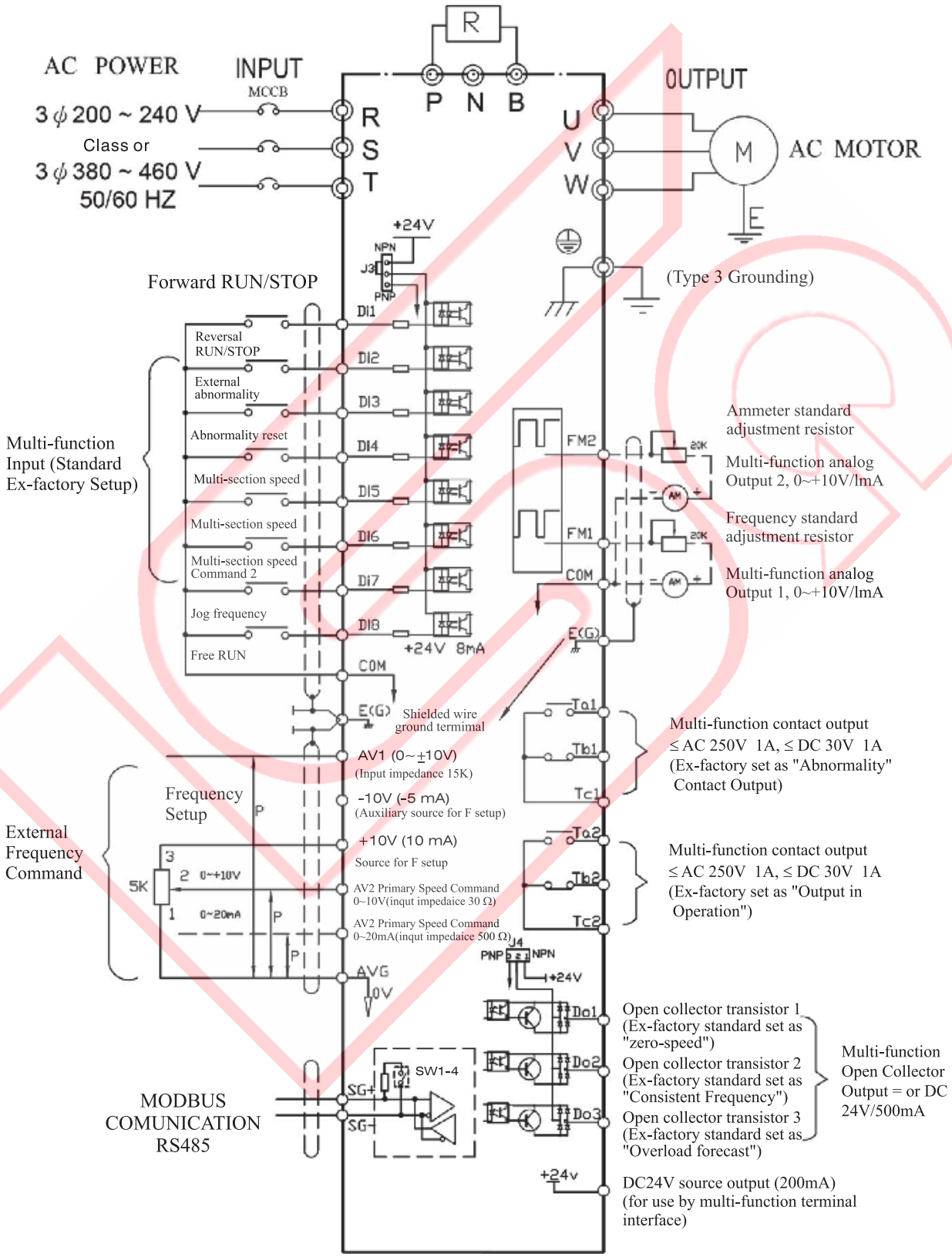

Coping with Sink Mode/Source Mode

◎ With the use of J3 (branch circuit connector), the logic of the input (Di1~Di8) terminals may be switched to Sink Mode or Source Mode

◎ With the use of J4 (branch circuit connector), the logic of the input (Do1~Do3) terminals may be switched to Sink Mode or Source Mode.

Table: Sink Mode, Source Mode and Signal Input

	Digital Input (D – in) Mode	Digital Output (D – out) Mode
Sink Mode	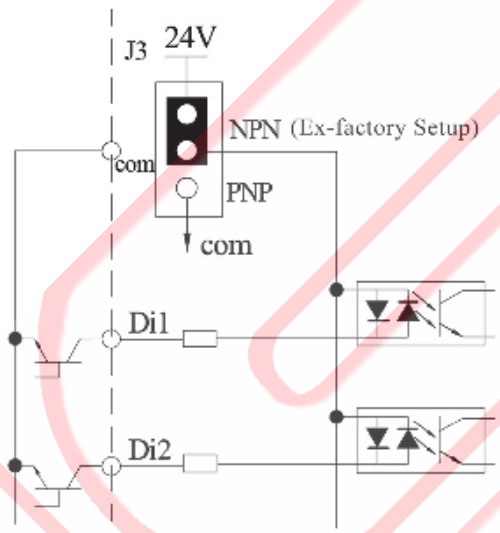	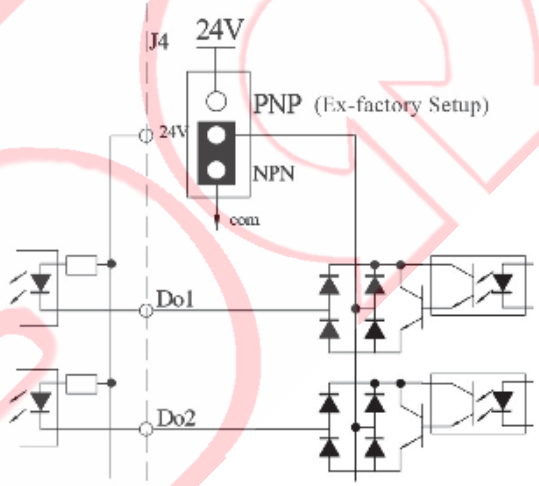
Source Mode	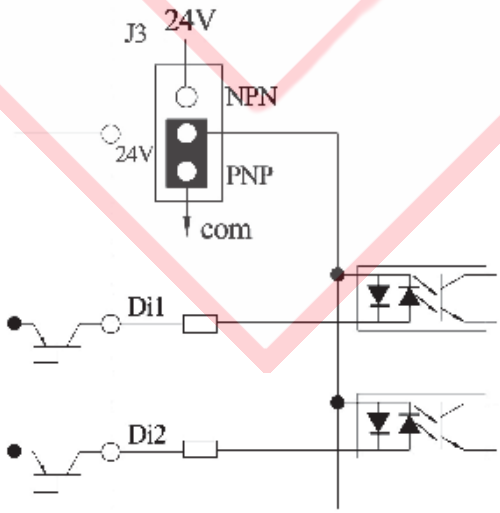	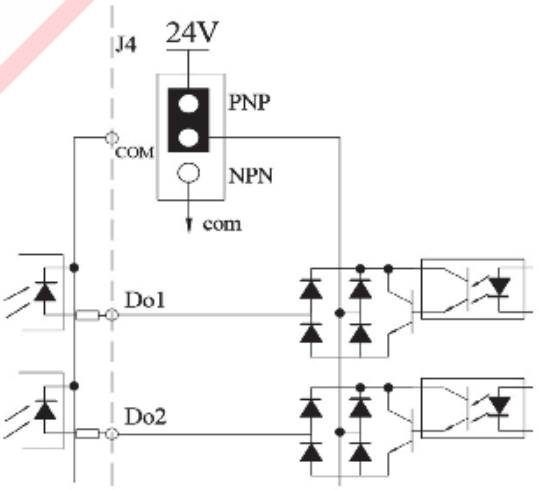

Installing Option Card and Wiring

Installing Procedure:

1. Before installing the option card, confirm the power indicator (CHARGE) inside the component of the ac drive is OFF, then remove the digital operator and the lid to facilitate installation.

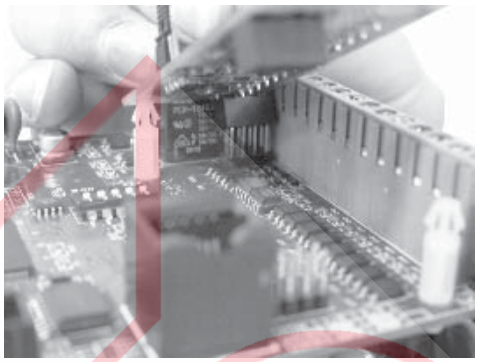

2. Never exercise excessive force during installation. Firmly press in the direction as illustrated (from top to bottom) to place the golden fingers, which to be engaged and laterally pressed to secure.

3. Check for any missing parts upon completing the installation before restoring the lid to subject to feeding test.

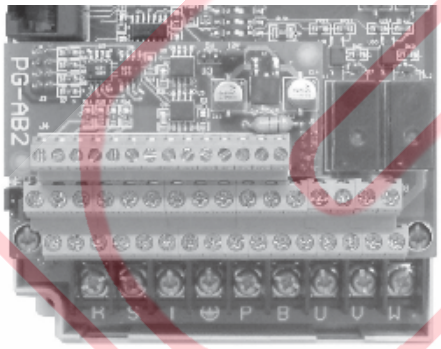

WARNING

Before feeding, make sure that terminal block screws and wiring are firmly secured. In case of any problem found with any mechanical part, do not try to repair at own efforts; instead, you should contact the genuine maker or its authorized dealer to solve the problem.

PG-AB2 (Optional):

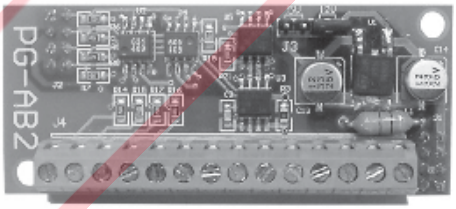

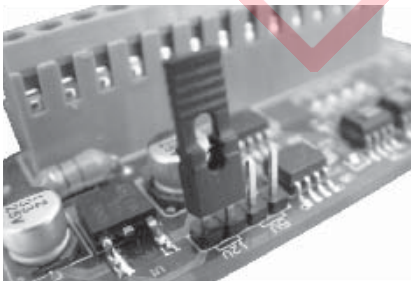

The J3 control signal source adjustment Jump used for the second unit encoder (Terminals A1, B1) is essentially for the determination for the pulse generator of having +5V or +12V at the jump in the right upper corner as the input. External wiring diagram and PG-AB2 terminals and specification are given detailed description and notes in P2-13~P2-15.

PG Speed Control Card (Option Card)

PG-AB2 Terminals & Specification

Terminal Mark	Description	Specification
E	Shielded cable connection ground terminal	- - - - -
A	Phase A pulse input (+)	∗ Adaptable to Line Driver, Encoder with 5V or 12V source of complementary and open collector transistor, A, B. Phase signal output. ∗ Maximal response frequency 300 KHz. ∗ If open collector transistor type of input is used, connect Phase A and Phase B terminals to source terminals of 12V encoder.
$\bar{A}$	Phase A pulse input (−)	
B	Phase B pulse input (+)	
$\bar{B}$	Phase B pulse input (−)	
AO	Phase A pulse monitor output	∗ The maximal for Phase A and Phase B open collector transistor output is DC 5V/30mA. ∗ Maximal response frequency 300 KHz
BO	Phase B pulse monitor output	
5V	Pulse generator dedicated source	DC+5V (±5%), 200mA (max.)
12V		DC+12V (±5%), 200mA (max.)
0V		DC 0V (+5V and +12V share the common grounding terminal)
A1	Phase A pulse frequency command input	For Phase A and Phase B, the input is done by open collector transistor type (0~300 KHz). (Select J3 according to the specification.Refer to page 2-12 to selection a correct signal voltage.)
B1	Phase B pulse frequency command input	
AO1	Phase A pulse frequency command monitor output	∗ Phase A and Phase B open collector transistor output, DC5V/30mA (max.) ∗ Maximal response frequency 300 KHz
BO1	Phase B pulse frequency command monitor output	

WARNING

While installing PG-AB2 Speed Control Card, confirm that the CHARGE indicator in the ac drive is OFF.

◎ 1. Refer to the table given on PG-AB2, and the voltage specification of the encoder installed while exercising the PG speed control.

◎ 2. A set of "speed feedback control input" is provided on PG-AB2 card to accept the complementary type input from Line Diver, or open collector transistor type input; a "frequency command input, allowing control of speed command ratio by taking advantage of the multiplication setup frequency ratio o F132; and two sets of "pulse monitor output", for exercising synchronous operation speed command source and monitor.

◎ 3. Always use the shielded wire on the signal line.

◎ 4. Do not use the PG source for any purpose other than PG, or error may present due to noise.

◎ 5. Maintain the PG wiring not greater than 100M, and keep it far away from the power cable as applicable.

◎ 6. Determine the revolving direction for PG according to F129 (to set up the direction for the encoder 1). The initial setting relates to Phase A taking the lead when the motor is revolving clockwise.


CAUTION

To avoid accident due to interference, proper shielded wire must be secured for signal wiring adapted to elevator or ony remote control; negligence in this caution will result in personal injury and property loss.

PG-AB2 Wiring Diagram

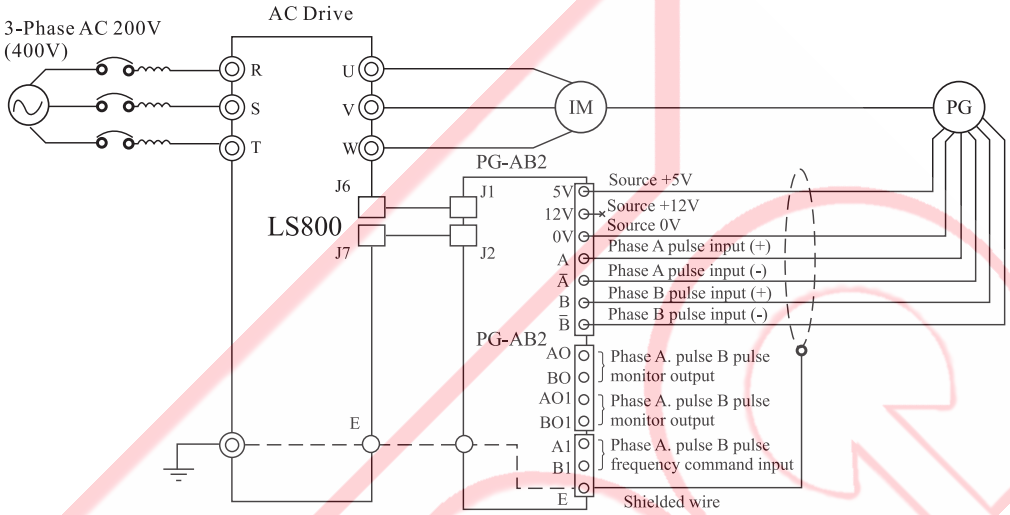

There are two types, 5V and 12V, of internal source for PG-AB2, confirm PG source specification before wiring.

◎ The PG output pulse detected is 300kHz max.

◎ The PG output frequency (FPG) may be solved by the following formula:

$$\text{FPG(Hz)} = \frac{\text{Motor revolving speed at the highest frequency output}}{60} \times \text{PG Constant(p/rev)}$$

Make available other sources if the PG source capacity is 200mA or above. Installation of additional capacitor at the source end or the similar measure is needed if the exercise of transient power interruption process is a must.

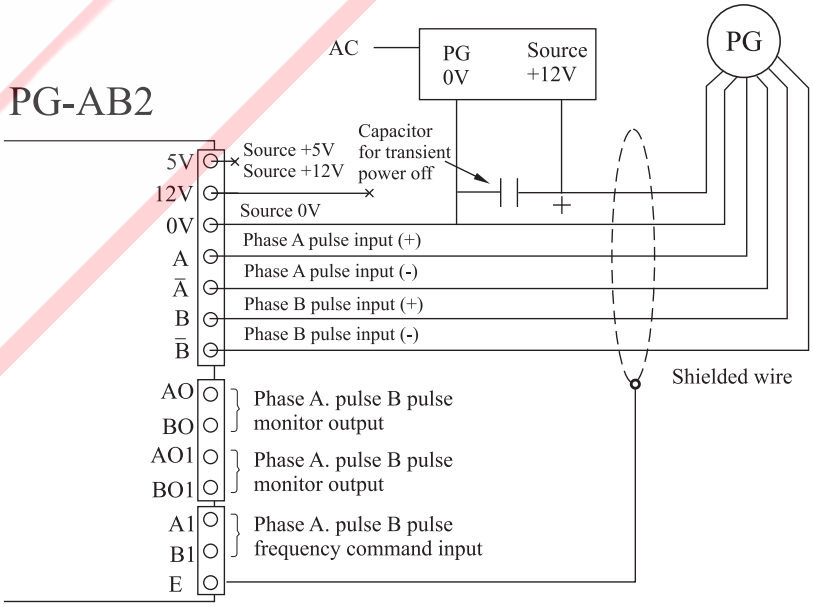

PG-AB2 I/O Circuits Construction Chart

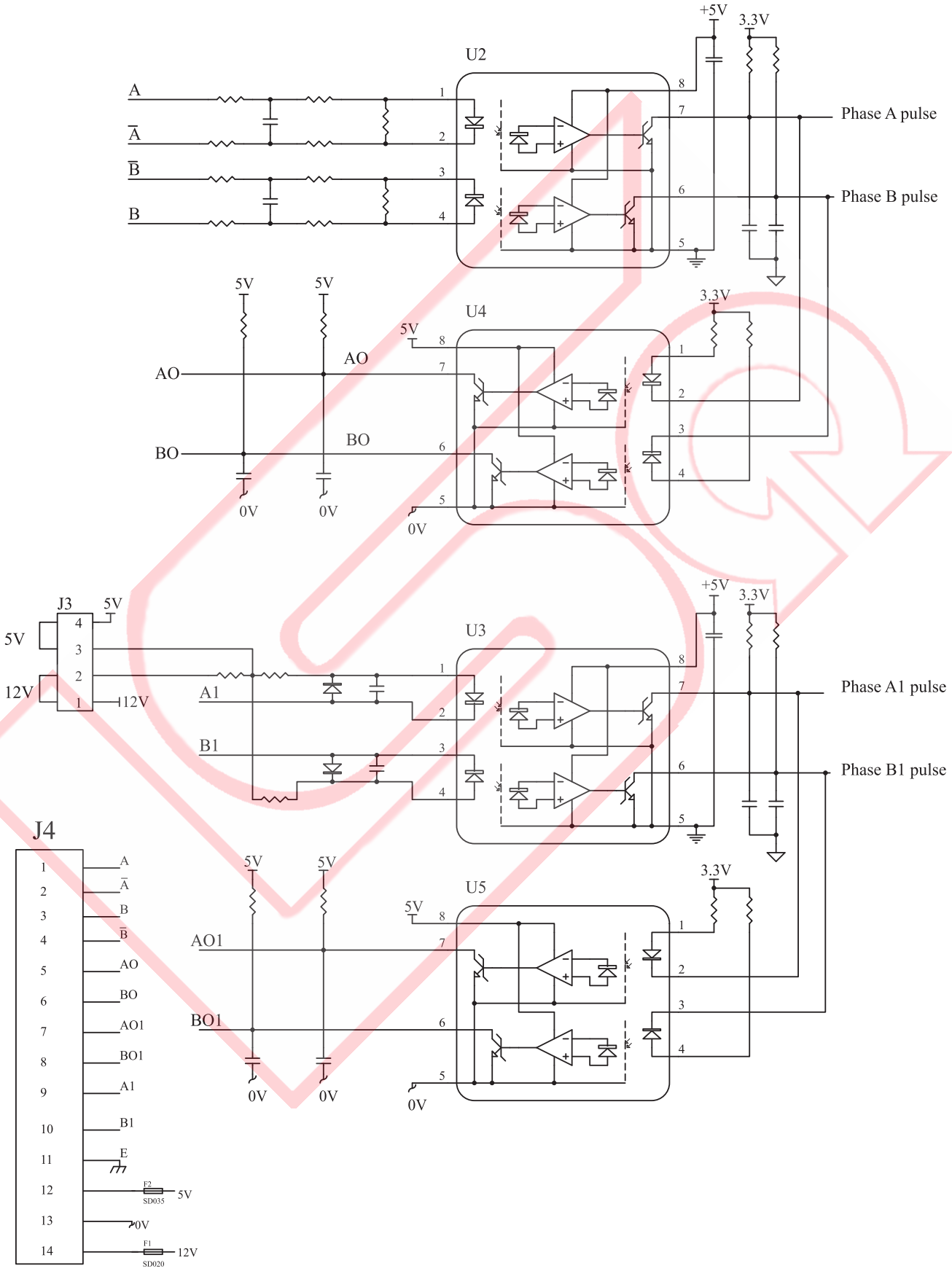

III Digital Operator

Location & Designation of Digital Operator

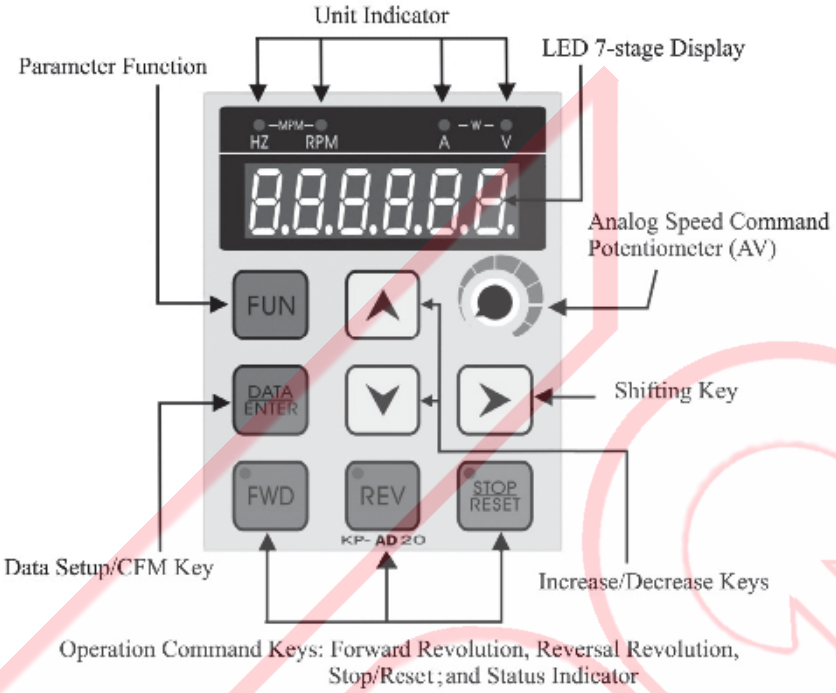

Functions of Digital Operator

The operator functions include operation, frequency setup, operation status monitor, parameter setup, abnormality display, parameter storage, and parameter duplication.

WARNING

When the vector control mode is selected to duplicate any parameter of F126=4,5,6 for example, make sure that the electric machinery features must be consistent; otherwise, perform once the Auto-tuning of electric and mechanical parameters.

Storing Parameters

Save each and all parameter settings that have been confirmed and complied with the purposes as demanded in the commissioning into EEPROM of DSP (F207=1); and save the back-up into EEPROM of the digital operator (F207=2) to perform parameters duplication for multiple units of ac drive or function as the storage area for the second set of parameter group.

Duplicating Parameters

SAVE (1) Save the ac drive parameters into the digital operator by selecting Parameter F207: Save Present Parameters – 2: Save to Digital Operator.

RECALL (2) Power off to remove the digital operator and install it to another ac drive; recall the duplicated parameter to the RAM in the DSP by selecting Parameter F206: Recall Parameter (source)=3: Parameter of Digital Operator before selecting F207=1: Save to EEEPROM in DSP to complete parameter duplication for another unit of ac drive.

Operation Keys Overview:

Classification	Key	Brief Description of Function
Control/ Parameter Key	FUN	Enter into Parameter Function Mode key.
		In the operation control mode, with F5: Revolution Speed Command Source set at 0 for the frequency setup under PB_ operator.
	DATA ENTER	To read, and write parameter settings.
		To enter data confirmation and enter into control mode.
		Enter into monitor 35 operation status settings in operation control mode.
Shift/ Increase, Decrease Keys	➢	Remove the flaring cursor to the right to select the number of digital place of the setting to be entered.
	▲	To execute numeric increase for parameter encoding and setting.
	▼	To execute numeric decrease for parameter encoding and setting.
Operation Command Key	FWD	To execute the command of forward resolution, and turn on the LED indicator.
		The functional key to stop operation if the direction shift does not execute the command of forward revolution,
	REV	To execute the command of reversal resolution, and turn on the LED indicator.
		The functional key to stop operation if the direction shift does not execute the command of reversal revolution,
	STOP RESET	To execute the command of stop operation.
		To execute reset in case of abnormality; and return to the original setting in parameter setup mode.
Revolution Speed Command		F5: Revolution speed command source setting at 2 as the revolution speed control for the operator AV (DC 5V as inherited)

Parameter Setup Mode

This mode is used for changing internal parameter setting. Use Increase/Decrease Key and Step-up Key to complete the change. Upon completing the change, press ENTER/DATA Key to save the data into RAM and quit the Setup Mode.

Parameter Setup Mode Flow Chart

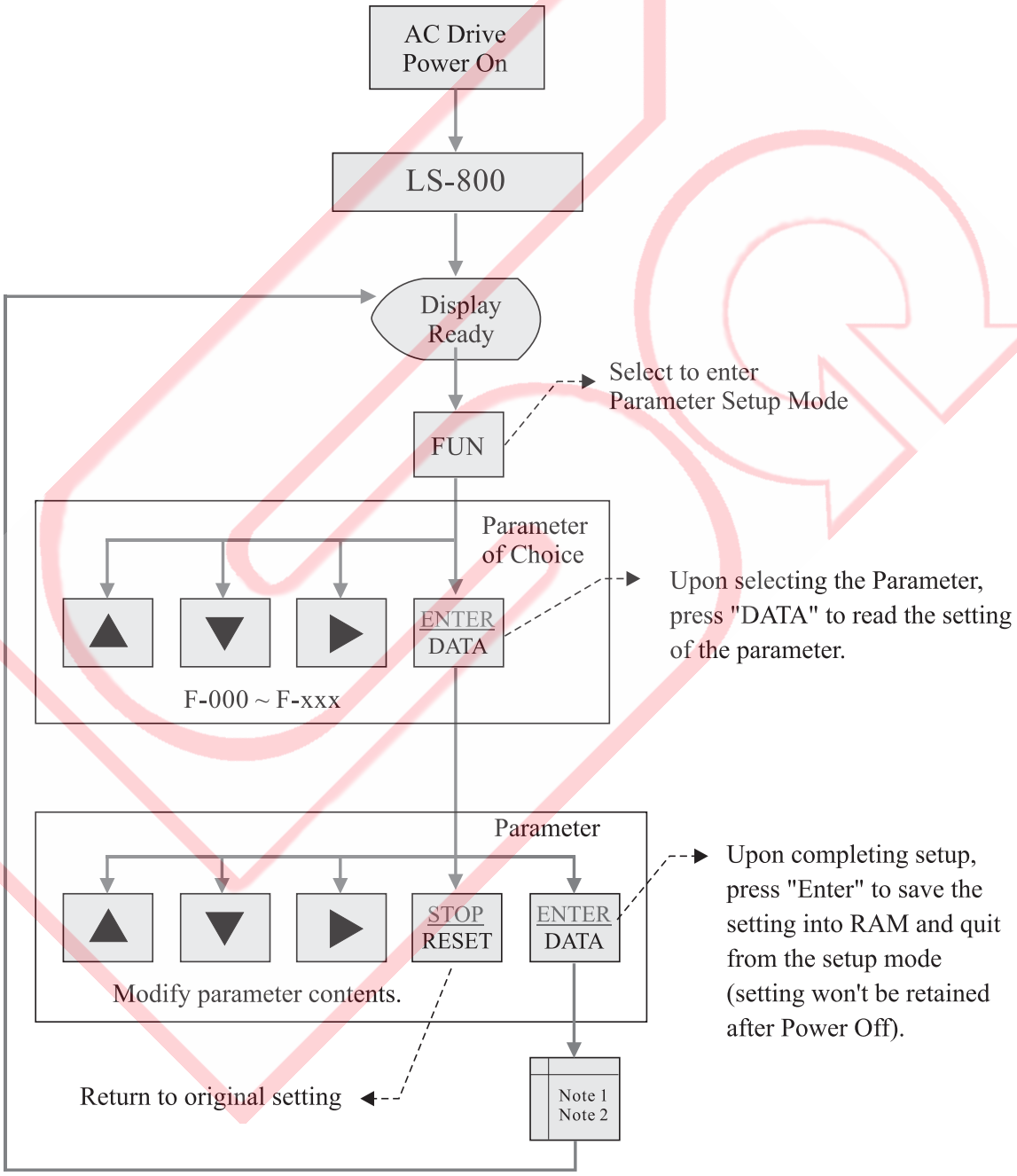

- Note 1: Make sure to save each and all parameter setting that have been confirmed and complied with the purpose as demanded in the commissioning into the built-in EEPROM by selecting F207 (save current parameter)= 1:Save to DSP (built-in EEPROM) to prevent loss of the parameter setting.
- Note 2: F207 (save current parameter)= 0: Not Save ; 1 : Save to DSP ; and 2 : Save to Digital Operator.

Operator Control Mode

The flow chart of the operator control mode is given below. This mode is for monitor display in the control of control operation and frequency display commands, output frequency, output amperage and output voltage, as well as the display of abnormality nature and records. For details of parameters, refer to Appendix Schedule of Parameter Settings.

Operator Control Mode Flow

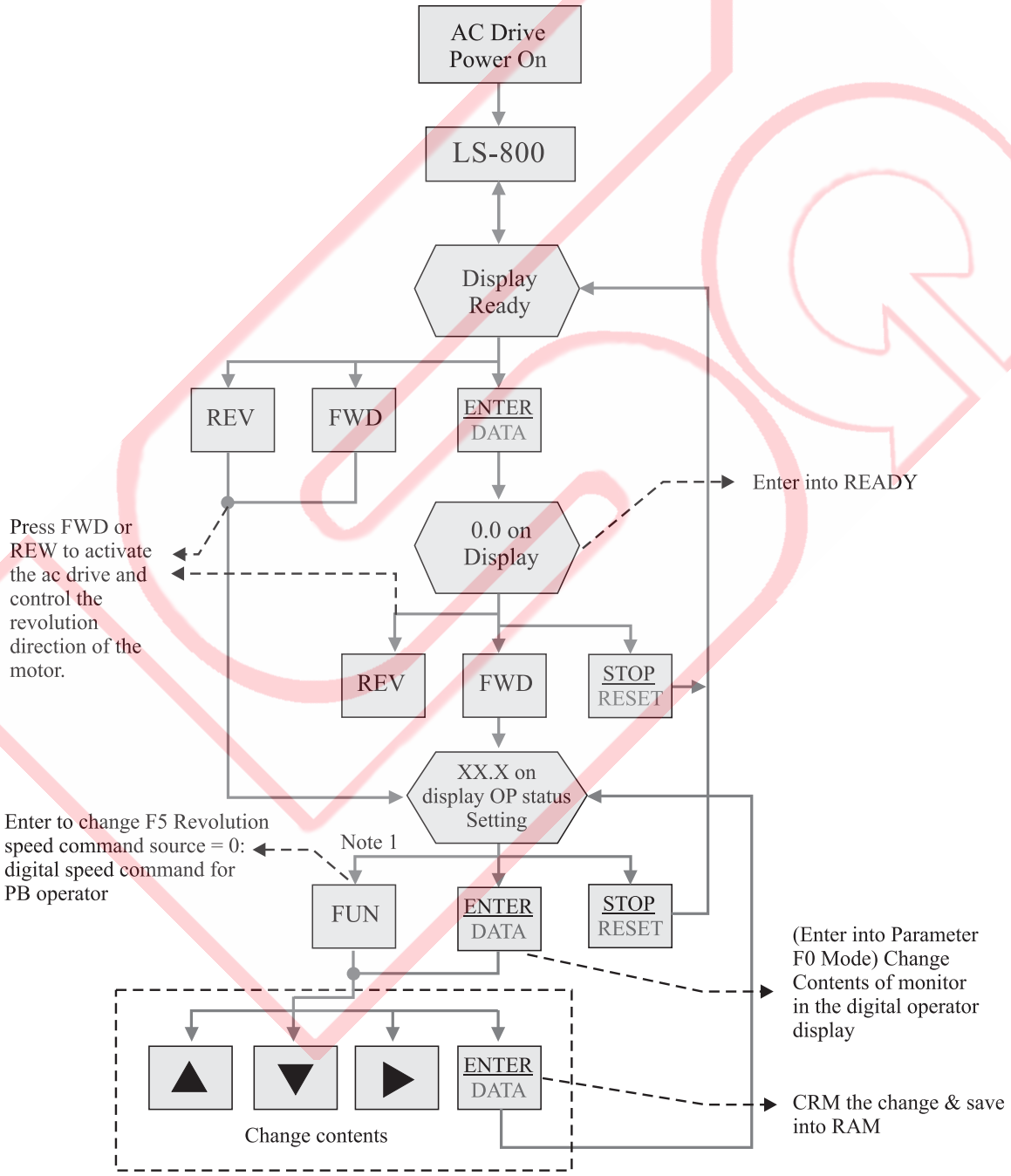

Note 1: If the speed signal source dose not fall on F5(revolution speed command source) = 0: PB Operator Mode. the digital speed command input is ineffective.

Multi-function Digital I/O Terminals Status Display Inspection

F0 : Display Status Setting = 22 (Multi-function digital input terminal status)

Multi-function Parameter → F65 F64 F63 F62 F61 F60 F59 F59

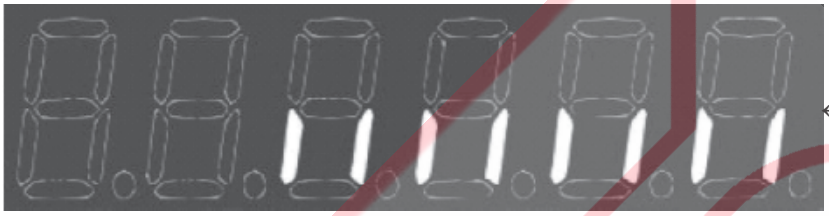

← Display in OFF Status

Multi-function Terminal → Di8 Di7 Di6 Di5 Di4 Di3 Di2 Di1

Multi-function Parameter → F65 F64 F63 F62 F61 F60 F59 F59

← Display in ON Status

Multi-function Parameter → Di8 Di7 Di6 Di5 Di4 Di3 Di2 Di1

F0 : Display Status Setting = 23 (Multi-function digital input terminal status)

Multi-function Parameter → F66 F70 F69 F68 F67

← Display in ON Status

Multi-function Terminal → ↑ RL1 RL2 Do3 Do2 Do1

Ineffective

Multi-function Parameter → F66 F70 F69 F68 F67

← Display in OFF Status

Multi-function Parameter → ↑ RL1 RL2 Do3 Do2 Do1

Ineffective

IV Commissioning

Commissioning Operation

Inspection before Operation:

◎ Upon completing the wiring and before feeding for commissioning, check to confirm that:

1. If wiring is correct? "Input terminals R. S. T. shall be connected to the power source; and output terminals U. V. W., to the 3-phase induction motor." Never confuse the input and output connections.
2. If any residual conductor cuttings left inside the ac drive and where around the area of the wiring terminal block? If any, clean it up.
3. If all terminals and screws are firmly secured?
4. If there is any short-circuit or grounding found between terminals?
5. If the input source voltage is of the same grade of the rated voltage of the ac drive.

Commissioning :

◎ The ac drive has been ex-factory set at F126=2, i.e., the Open loop V/F Control Mode, or select the operation mode according to F126 as detailed in P5-28, and 29. F4=0, i.e., the operation control method is PB Operator; and F5=2, the speed command source is the potentiometer (V. R) control. Before feeding for commissioning, turn the potentiometer (V.R) knob counter-clockwise before inputting the power. Carry out the commissioning according to the steps given below:

1. Power ON.
2. Confirm the display status is "ready".
3. Enter into operation control mode (Press keypad [FWD] to enter forward operation control.)
4. Enter speed command (Turn the potentiometer knob found on the operator slowly clockwise to run the commissioning at a frequency within 10Hz).
5. Press keypad [STOP] to slow down and stop the motor.

Operation Checklist :

◎ If the motor runs normally?

◎ If the revolving direction of the motor is correct (switch any two phases among U.V.W. cables found on the output side of the ac drive to change the revolving direction of the motor.)

◎ If there is any abnormal vibration observed from the motor?

◎ If smooth acceleration and deceleration are available?

◎ If any abnormality observed on the 3-phase load current? (Press keypad [ENTER/DATA] to enter parameter F0=31, 32, 33: i.e., the output current to monitor the U.V.W. output load amperage.)

Fast Operation Control Mode

◎ Many operation control methods may be applied for the ac drive to activate it to operate. Here is a summary operation method to activate the ac drive.

◎ Two primary operation control parameters involved in the activation of the ac drive; one is F4: Operation Control Source; and the other is F5: Speed Command Source. Refer to the table given below for the operation.

Parameter Function	Operation Procedure	Ex-factory Setting	Page No.
F4：Operation Control Source			
0：PB Operator	Press keypad FWD once Ready displays ↓ Enter into Forward Operation Mode	0	P5-2
	* During commissioning, watch for the revolving direction of the motor. *		
1：Digital Input Terminal	Terminal Di1 /ON → FWD (indicator ON) operation, Dil/OFF→Stop		P5-2 P5-18
F5：Speed Command Source			
0：PB Operator	Enter into frequency to change mode by pressing keypad FUN while in operation status.	2	P5-3
1：Digital Input Terminal	Edit from the multi-function input terminal the 8-stage preset frequency to execute operation.		P5-3
2：Operator AV Input (5V)	To perform speed control from the potentiometer (V.R.) on the operator.		P5-3
3：AV1 Input (±10V)	To perform speed control by entering 0 ~ ±10V from analog AV1 terminal.		P5-3
4：AV2 Input (+10V)	To perform speed control by entering 0 ~ +10V from analog AV2 terminal.		P5-3
5：AI Input (20mA)	To perform speed control by entering 0 ~ 20mA from analog AI terminal.		P5-3
6：AV2+AI	With analog AV2 and AI terminals, addition and subtraction operation can be provided for both analog signals at the same time to perform revolving speed control.		P5-3
7：Encoder 2	Additional PG-AB2 speed control card must be installed to connect to terminals A1 and B1 with digital pulse signals to perform revolving speed control.		P5-4

Auto-tuning Function

Auto-tuning Elements

◎ If F126=4: Sensorless V/F vector Control, 5: Closed Loop Flux Vector Control, or 6: Sensorless Flux Vector Control is selected for the control mode; auto-tuning must be performed before operation.

◎ When F126=6 Sensorless Flux Vector Control is applied, select the motor with a rated voltage 20V (40V in case of 400 Grade) higher than the input source voltage of the ac drive where speed precision is a must within the high speed range (approximate 90% or greater of the rated speed). If the rated voltage of the motor is equal to that of the input source of the ac drive, then proper and correct motor characteristics may not be available if the output voltage of the ac drive is less than sufficient. (Refer to Prompt 1.)

◎ Before performing the function of parameter auto-tuning, the specification capacity on the nameplate of motor must be set to Parameter F120: Rated Voltage, F121: Rated Amperage, F122: Rated Frequency, F123: Rated speed, F124: Rated HP, and F125: Number of Polarity of Motor.

◎ Select F4 (Operation Control Signal Source) = 0: PB Operator Operation before performing the auto-tuning.

CAUTION

Upon performing the auto-tuning, the motor must be separated from the machine, and confirm that there is no exposure to danger even the motor is running.

Parameter Auto-tune

◎ Upon performing electric parameter auto-tuning, the ac drive will continue to perform functions of static parameter auto-tuning and dynamic parameter auto-tuning. It is feasible to automatically detect those electric characteristics of the motor and automatically set up the motor electric parameter group in the software before setting up F126=1 for machinery parameter detection. Perform the auto-tuning according to the following steps:

1. Set up the control mode (F126) at 0: Electric Parameter Detection to perform the parameter auto-tuning.
2. Press keypad [ENTER] for the ac drive to display Pr-RL to start outputting DC to the motor for providing Stage 1 static mode parameter auto-tuning in advance, and Stage 2 dynamic parameter auto-tuning for the revolution type of the motor.
3. If the auto-tuning has been successfully executed, the ac drive will automatically set up the electric characteristics of the motor and save them into corresponding parameters F133~F137.

4. If F126=5 (Closed Loop Flux Vector Control) Mode is required, perform the F126=1(Machinery Parameter Detection) auto-tune. The setting of the parameter modulation will affect the response of the vector speed (PI) control. During the auto-tune, the ac drive displays Pr-Jm; the dynamic parameter modulation of the revolution type of the motor will be performed, and the modulation setting will be saved into Parameter F138. (Refer to Prompt 2.)
5. Modify the control mode (F126) to 4: Sensorless V/F vector Control, 5: Closed Loop Fiux Vector Control, or 6: Sensorless Flux Vector Control.
6. Save electric parameters into F207-1: Save to DSP (EEPROM) to avoid losing the electric parameters after power off.

Note: If auto-tuning continues to fail, adjust for higher rated current of the motor at an increment of 10% until the auto-tuning modulation is successfully done. In case of further failure, replace with an electric machine provided with better characteristics, or input by manual electric parameters to F133~F137.

PROMPT:

1. With the speed precision highlighted within the high speed area (approximately 90% or greater of the rated speed, set F120 (Motor Rated Voltage) at 90% of F109 (Input Voltage)＊1.1.

2. When Parameter F126 is set at 1 for performing auto-tuning of mechanical parameter, PG feedback device must be provided each to the ac drive and the motor before carrying out machine parameter test and detection.

Auto-tuning Function Process Flow Chart

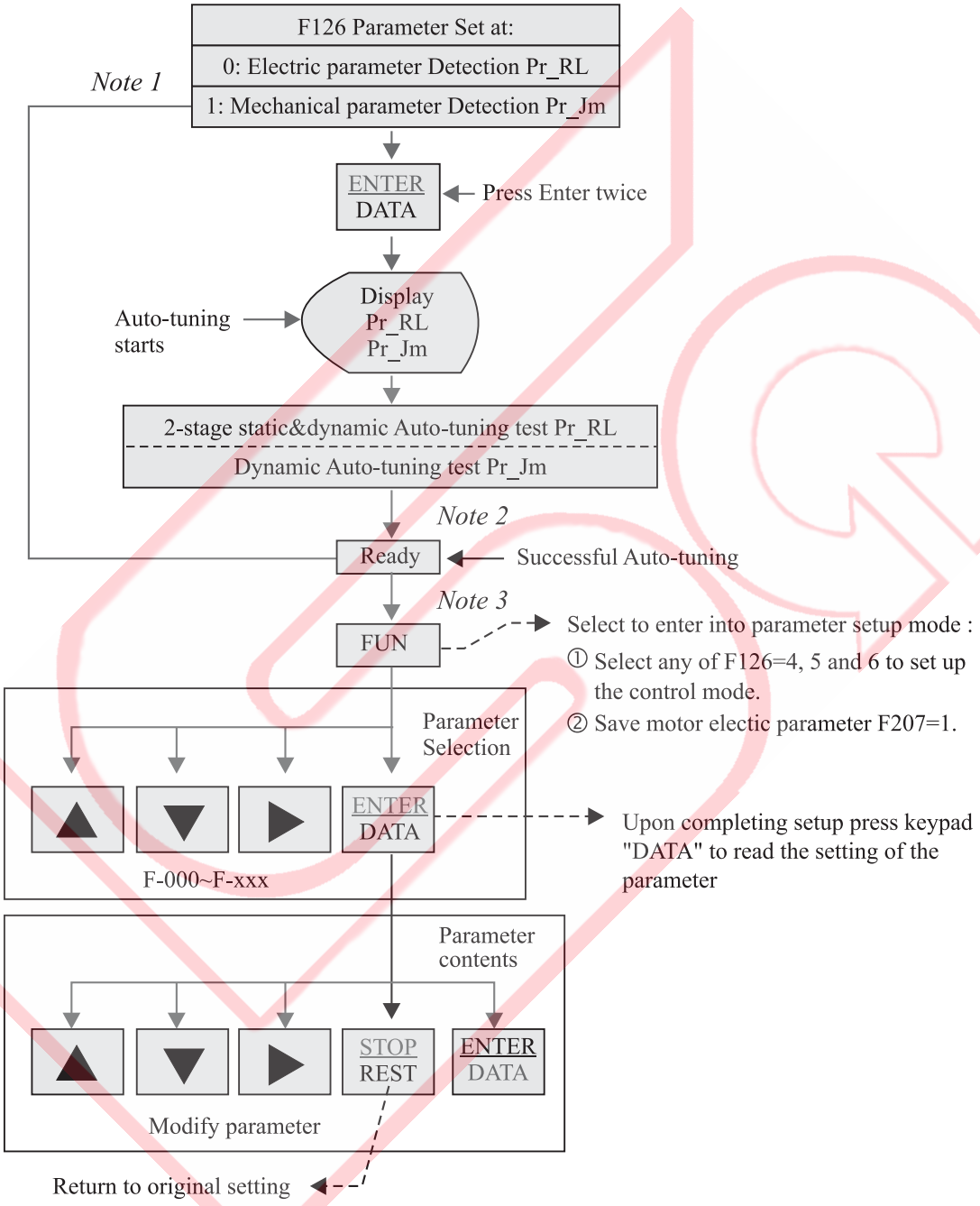

Note 1 : Run the Mechanical Parameter Detection right after the completion of electric parameter detection .
Note 2 : Motor electric characteristics are automatically set to corresponding parameter F133~F138.
Note 3 : ① Set up F126 back to the corresponding operation control mode; and
② Set up F207=1 save parameter.

Basic Parameter Setup

Note1: N=Setup varies depending on the ac drive and motor capacity.

Parameter Code	Description	Setup Range	Unit	Ex-factory Setting	Page No.
F4	Operation control source	0 , 1	1	0	P5-2
	0：PB Operator 1：Digital input terminal				
F5	Speed command source	0 ～ 8	1	2	P5-3
	0：PB Operator 3：AV1 Input (±10V) 6：AV2+AI 1：Digital input terminal 4：AV2 input (+10V) 7：Encoder 2 2：Operator AV input (5V) 5：AI Input (20mA or+10V) 8：External PID				
F6	Activation Mode	0~2	1	0	P5-5
	0：Started by activation F 1：Flying Re-start activation 2：DC brake & started by activation F				
F7	Stop Mode	0~2	1	1	P5-5
	0：Free-run 1：Dynamic stop 2：Dynamic DC brake				
F13	Revolution limit	0~3	1	1	P5-7
	0：FWD & REV 1：FWD Only 2：REV only 3：REV only with negative baize				
F14	F lower limit(* F14 ≤ F15)	0~400.0	0.1Hz	0	P5-7
F15	F upper limit(* F15 ≥ F14)	0~400.0	0.1Hz	60.0	P5-7
F26	Acceleration Time 1	.1~1200.0	0.1 sec	10.0	P5-9
F27	Deceleration Time 1	.1~1200.0	0.1sec	10.0	P5-9
F59	DI1、DI2 Setup	0 , 1	1	0	P5-18
	0：DI1(FWD/STOP)，DI2(REV/STOP) 1：DI1(RUN/STOP)，DI2(FWD/REV)				
F81	Stall Prevention	0 , 1	1	0	P5-24
	0：Not Activated 1：Activated				
F82	Stall voltage setup	1.00~1.25	0.01	1.10	P5-24
F83	Stall amperage setup	0.50~2.50	0.01Pu	1.50	P5-24
F84	OL amperage level	1.00~2.50	0.01Pu	1.50	P5-25
F85	OL time allowance	0.1~120.0	0.1 sec	60.0	P5-25
F86	Leakage current outputted or unbalanced 3-phase output current	0.001~0.500	0.001Pu	0.100	P5-25
F90	Discharge brake loop activated	0 , 1	1	0	P5-26
	0：Not Activated 1：Activated				
F108	PWM switch frequency	2000~16000	1Hz	5000	P5-30
F109	RST input voltage(rms)	180~500	1VAC	N (Note1)	P5-31
	(* F109 setting must satisfy：F109 ≤ 1.2×F120)				
F120	Motor Nameplate Information: Rated voltage (rms)	180~500	1V	N (Note1)	P5-32
F121	Rated amperage (rms)	1.5~130.0	0.1A	N (Note1)	P5-32
F122	Rated frequency	50.0~70.0	0.1Hz	N (Note1)	P5-32
F123	Rated speed	0~4200	1rpm	N (Note1)	P5-33
F124	HP	.5~50.0	0.1Hp	N (Note1)	P5-33
F125	No.of Pole	2~12	2 pole	N (Note1)	P5-33
F126	Control mode setup	0~6	1	2	P5-33
	0：Electric parameter detection 3：Closed loop V/F vector control (V/F + Feeedback) 5：Closed loop flux vector control (Flux vector control+ feedback) 1：Mechanical parameter Detection 2：Open loop V/F vector control 4：Sensorless V/F vector control 6：Sensorless flux vector control				
F127	Speed feedback	0 , 1	1	0	P5-34
	0：no feedback 1：Encoder1				
F128	Encoder 1 Slot No./Revolution	600～2500	1P/rev	1024	P5-34
F129	Encoder 1 Direction	-1～1	1	1	P5-34
	-1：B leads A 0：single phase feed back 1：A leads B				

V Description of Parameter Functions

Operation Status Monitor Setup

Parameter	Description	Range	Unit	Ex-factory Setting
F0	Operator display variables selections	0~36	1	1

◎ Seven digits display and LED indicators on the operator panel may be applied to monitor a total of 35 operation status or settings of the ac drive.

Setting	Function	Description of Function	Related Parameter
0	Speed Command	Display the command setting	F5
1	Output Motor Speed	Display the output motor speed value.	—
2	Feedback Speed 1	Display the actual speed of the motor feedback to Encoder 1.	F128
3	Feedback Speed 2	Display the product of Encoder 2 feedback speed and F132 multiplying factor.	F130、F132
4	Sensorless Vector Output Speed	Display the calculated sensorless vector control output speed.	F126=6
5	Output Frequency	Display the compensated output frequency of the closed loop scalar or vector control.	F126=3.4.5.6
6	Output Process Speed	Display the linear speed, feeding speed of the process (with maximum display value at 3276.7).	F2.F123
7	Slip Frequency	Display the slip Frequency due to load when the motor is on load	F126=3.4.5.6
8	Vdc (V)	Display DC voltage on the DC bus capacitor	—
9	Output Voltage (rms)	Display the output (U.V.W) voltage (rms) of the ac drive.	
10	Excitation Voltage	Display the excitation voltage in vector control mode	
11	Torque Voltage	Display the torque voltage in vector control mode	
12	Output Current (rms)	Display the total drive motor load currect from output of ac drive (U.V.W)	—
13	Excitation Current Command	Display the command value of excitation current in vector control mode	
14	Torque Current Command	Display the command value of torque current in vector control mode	
15	Excitation Current	Display the actual excitation current	
16	Torque Current	Display the actual torque current	
17	Output Apparent Power	Display the total output apparent power P=IV	
18	Output True Power (rms)	Display the total true power P=VI cosψ	
19	Output Reactive Power	Display the total reactive power P=VI sinψ	
20	Temperature	Display the temperature reading of the internal heat sink	F87
21	Counts	Display the counter value of the built-in summary counter.	F75
22	Digital Input Status	Display the digital input and output terminals control status for real-time display of ON or OFF status (for status monitor, refer to P3-5).	F59～F65
23	Digital Output Status		F66～F70
24	Digital Operator AV (%)	• Display the analog input voltage as displayed • Display the noise voltage generated by the wiring; the voltage may be used to set up the bias voltage for avoiding unnecessary noise interference.	F5=2
25	AV1 (%)		F5=3
26	AV2 (%)		F5=4
27	AI (%)		F5=5

Operation control parameters

Setting	Function	Description of Function	Related Parameter
28	Vdc_0	Display the initial Vdc of the DC bus when powered on capacitor	—
29	Cycles & Multiple Stages	Display the cycles of automatic operation. and the number of operation stages currently executed	F92～F100
30	Reserved	Reserved	
31	Phase U current (rms)	Display the drive motor load amperage of Phase U output of the ac drive	
32	Phase V current (rms)	Display the drive motor load amperage of Phase V output of the ac drive	
33	Phase W current (rms)	Display the drive motor load amperage of Phase W output of the ac drive	
34	PID (%)	Display the PID control output in %	
36	LS800 Version	The version of LS800 Software.	

F1	Speed display unit	0~1	1	0

◎ Frequency (Hz) or revolution per minute (rpm) can be displayed for the output operation speed of the ac drive to be set by this parameter while displaying any function selected from the status displayed by F0 operator.

- **0：<u>Frequency(HZ)</u>**
- **1：<u>Revolution per minute(rpm)</u>**

F 2	Display Multiplying Factor for process speed display	0.001~10.000	0.001	1.000

◎ This function may be applied to set up a multiplying factor to display linear speed, feeding speed or the output of the final mechanical real rpm after reduction ratio.

◎ The display value of the 7-digits display = output rpm × F2 multiplying power (with the maximum display value at 3276.7).

F 3	Operator Display Update constant LPF time	0~15	1	2

◎ This function filters the variation of low byte display value in order to read the display status number.

◎ Long constant setting is not recommended as it will affect the response speed of the displayed number.

◎ This function relates to the built-in low pass filter.

F 4	Operation Control Source	0~1	1	0

* **Before operating the ac drive, operation control command must first be given. User may select the operation control input between <u>PB Operator</u> or <u>Digital Input Terminal</u>.**

- <u>0：PB Operator</u> — Activation to start, forward direction, reverse direction and stop operation of the ac drive are all controlled by the PB operator.
- <u>1：Digital Input Terminal</u> — Activation to start, forward direction , reverse direction, and stop operation of the ac drive are all controlled by the digital input terminals.

Parameter	Description	Range	Unit	Ex-factory Setting
F5	Speed Command Source	0~8	1	2

*** This parameter relates to the speed command of the ac drive. The following nine options of speed commands are available for selection, depending on required configuration of the control system.**

*** Once the inching speed function setup becomes effective, it has the highest control priority is over the other nine speed commands and permits adaptation of any other type of speed command for alternative control.**

■ **0 : PB Operator** － Control is set up by keypad [Increase] and [Decrease] from the PB Operator, or by functions 11: Master Speed Increase, and 12: Master Speed Decrease Control of the multi-function programmable digital input terminals.

■ **1 : Digital Input Terminal** － 8-stage preset frequency comprises of 5: Multi-stage speed 1, 6: Multi-stage Speed 2, and 7: Multi-stage Speed 3, 8: Multi-stage Speed 4, and 9: Inching Operation Control by multi-function programmable digital input terminals total 16 preset speeds.

■ **2: (Operator) AV input (5V)** －Control by potentiometer (V.R) signals DC0~5V from the operator.

■ **3 : AV1 Input (±10V))** － Control by analog voltage signal DC0~±10V from analog input terminal AV1.

■ **4 : AV2 Input (+10V)** －Control by analog voltage signal DC0~+10V from analog input terminal AV2.

■ **5 : AI Input (20mA)** － Control by analog current signal DC0~20mA (or DC0~+10V to be selected from SW1~5) from analog input terminal AI.

■ **6 : AV2+AI** － Control by addition of two input values of the analog voltage and analog current (or voltage) signals from both analog input terminals AV2 and AI; or addition and subtraction control being done by an ideal negative bias set up by the parameter while performing synchronous linking analog compensation control for multiple units.

*** For example: (1) Parameter F15=60HZ(upper limit), AV2 of F49=100%**
F48=0V(with a bias of 0%) (see Fig.1 for the curve of Hz vs.V).

(2) AI of F54=50%.
F53= -50%(with a bias of 50%). (See Fig. 2 for the curve of Hz vs. mA (or V).

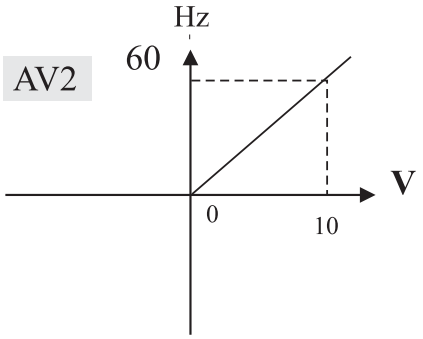

(Fig 1)

Performing Calculation of Addition and Subtraction (Note 1)

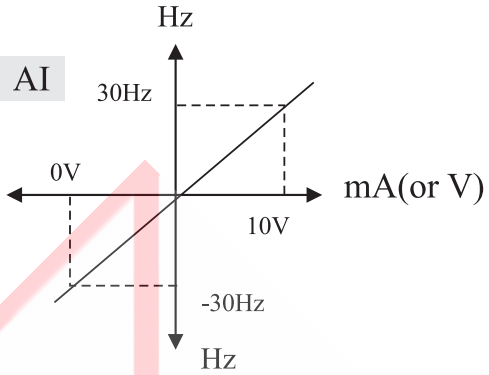

(Fig 2)

Note 1: Figs. 1 and 2 are schematic view showing the executed addition and subtraction calculation signals.

*** For example: AV2 of INV2 is the master speed input to exercise addition/ subtraction operation on AI signals with AI as compensating input. The sum of both values is not be greater than the upper limit of F15 frequency and if the difference between both is less than 0HZ, the ac drive stops. Refer to the setup method illustrated in Figs. 1 and 2 for the setting of the parameter.**

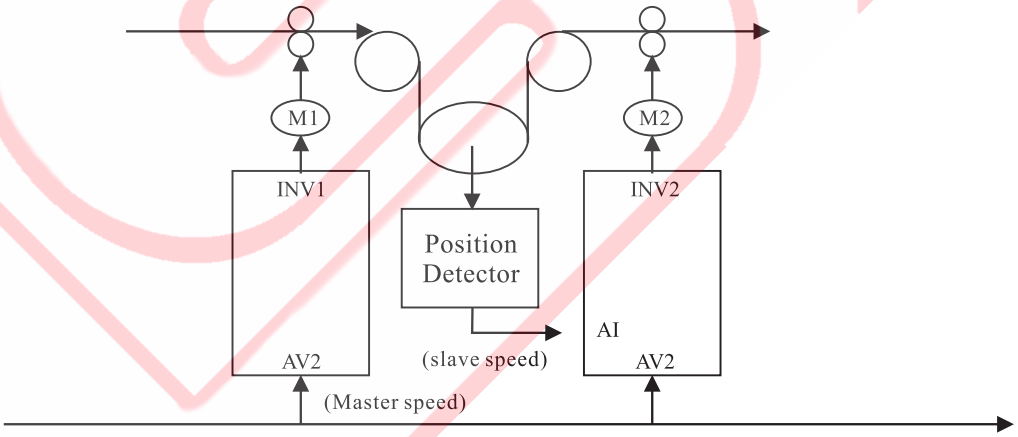

(Fig 3)

■ **7 : Encoder 2** －Relates to the control interface for the speed command of the digital pulse signal type. An additional encoder speed feedback card must be installed to provide follow-up operation control with the master ac drive (synchronous operation control by ratio).

(Refer to encoder setup parameter group F127~F132 for related application.)

■ **8 : External PID** －To perform external analog signals for PID feedback control. [Select parameter setup PID setpoint value and PID feedback value for its input control terminals, and PID parameter group F157~F171.]

Parameter	Description	Range	Unit	Ex-factory Setting
F6	Activation Method	0~2	1	0

■ **0 : Started by Activation Frequency**－ The activation input frequency of the ac drive. (Refer to F16.)

■ **1 : Flying Re-start Activation**－The motor frequency is first detected from the running motor by the ac drive, and the detected frequency point is entered for the speed operation (Catch the flying motor speed). so as to reduce the severe impact from the regenerated current of the motor upon starting.

■ **2 : DC Brake before Starting by Activation Frequency** －the ac drive upon receiving the start command signal, will first perform the DC brake to make sure that the motor is stopped properly before start-up by activation frequency. Refer to F8 and F9 for the parameter setup of the DC brake before activation.


WARNING

To use the function of flying re-start, select 3: Closed Loop v/f vector Control in F126 control mode. To do this, a PG device for Phases A and B signals must be made available to precisely detect the running frequency and revolving direction, this operation is preferred for a load with greater inertia. When selected open loop v/f vector control and sensorless v/f vector control, the error of the estimated idling frequency is greater when the electric signals transmitted by the idling motor are used to estimate the idling frequency and direction; meanwhile, impacts from regenerated current inputted to operation is greater, thus is more preferred for the load with smaller inertia.


INHIBIT

Use of this function of flying re-start is not allowed for Closed Loop Flux Vector Control and Sensorless Flux Vector Control in F126 control mode.

F 7	Stop Mode	0~2	1	1

◎ To select the stop mode of the ac drive as required by the machine after the input of the proper stop signal

■ **0 : Coast to Stop** － With the stop signal, the ac drive immediately turns off its drive signal for the power circuit between the ac drive and the motor to become OFF. Accordingly, the motor coasts to stop due to the system friction.

■ **1 : Dynamic Stop** － the motor reduces its speed and stops according to the rate of the deceleration time.

■ **2 : DC Brake Stop** － DC brake is enabled when the output frequency reduces according to the deceleration rate to the value to start the brake for stopping. This enables the motor to stop soonest. Refer to those related parameters of F10~F12.

Parameter	Description	Range	Unit	Ex-factory Setting
F8	Brake Time before Activation	0~30.0 Sec	0.1 Sec	5.0

◎ With this parameter set to activate the ac drive upon the expiry of the duration of the enabled DC brake. If the time is set at its minimum value, i.e., "0", it is deemed as a cancellation of the function of brake before activation.

*** Parameter F6=2 must be set up when DC brake function before activation must be used, and the frequency operation is activated once again immediately following the brake time expiry.**

F 9	Voltage of Brake before Activation	0~.200	0.001Pu	.050

◎ This parameter sets up the percentage of the output DC brake voltage before the operation of the ac drive. If it is set at its minimum, i.e., "0", the output brake energy is void, and will be deemed as a control for the deferred time operation of the drive activation. The length for the time deferred is the setting of F8.

F10	Stop Brake Time	0~30.0 Sec	0.1 Sec	5.0 Sec

F11	Stop Brake Voltage	0~.200	0.001Pu	.050

F12	Stop Brake Beginning Frequency	0~20.0HZ	0.1HZ	0HZ

◎ This parameter group sets the frequency to begin the DC brake voltage and brake time when the motor stops, thus to provide load holding after the motor stops. Do not set Stop Brake Time and Stop Brake Voltage at the minimum, i.e., "0" since there is no time or brake energy is available for operation.

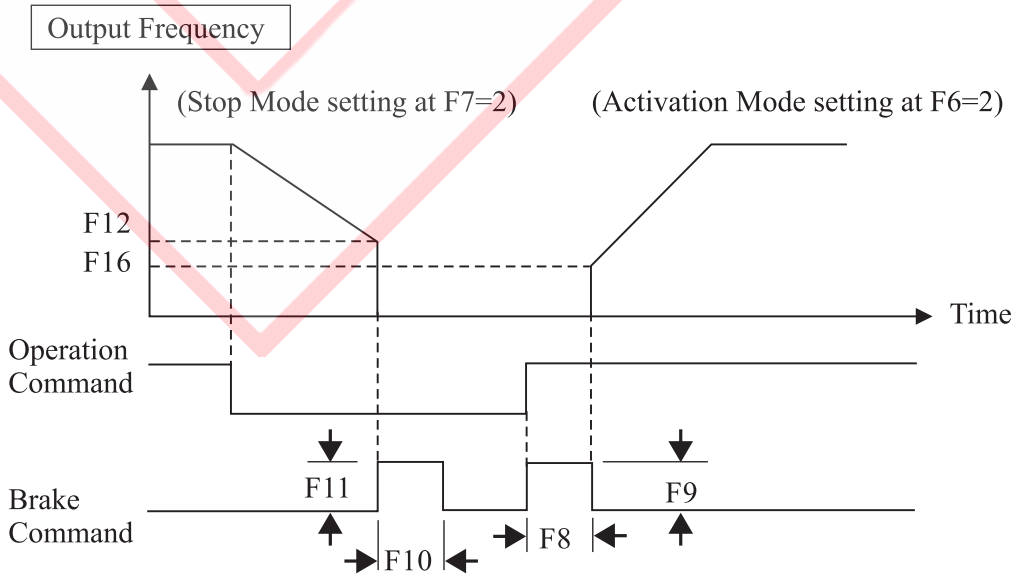

Speed Limit

Parameter	Description	Range	Unit	Ex-factory Setting
F13	Rotating Direction Control	0~3	1	1

◎ If for safety concerns for the operation of the mechine that the motor can only be set for forward or reverse direction, apply this set of functions to select the restricted rotating direction for the motor.

- **0 : Either FWD or REV**
- **1 : FWD only**
- **2 : REV only**
- **3 : REV only with negative bias**

◎ If 3: REV only with negative bias is selected, there are five types of analog input signal in the parameter F5: Speed Command that provide the settings of the negative bias frequency. When the analog input signal setting works within the negative bias frequency region, the motor runs in reverse direction; in positive frequency region, in forward direction. [For details of analog signal bias setup, refer to each analog signal bias parameter group (F41, F42, F48, and F53)

◎ When executing functions of external PID control and setting negative bias, the motor will be in REV operation droven by ac drive while PID Loop output value within -(%) and will be in FWD operatin while PID Loop output value within +(%).

WARNING

The rotating direction set for the ac drive is not necessarily the same as that of the motor. The polarity of motor differs on the each make. Attention must be made to the danger caused by reverse motor rotation.

F14	Lower Limit Frequency	0~400. 0HZ	0.1HZ	0

◎ The conditional: F14 ≤ F15.

F15	Upper Limit Frequency	0~400. 0HZ	0.1HZ	60.0

*** Proper upper and lower frequency limit settings could help protect the mechanical system. Any wrong speed command given by the operator shall not cause damage to the system due to machine idling or operation in dangerously high speed.**

*** The conditional: F15 ≥ F14.**

Parameter	Description	Range	Unit	Ex-factory Setting
F16	Activation Frequency	0~30. 0HZ	0.1HZ	0

◎ The function of lower limit frequency is disabled once it is smaller than the activation frequency.

◎ If the speed command setting is greater than that of F16 activation frequency the latter is inputted into operation up to the former. The system is in ready status if the speed command setting is smaller than that of the activation frequency.

◎ When the F14 lower limit frequency setting is greater than that of the F16 activation frequency and the speed command setting A is greater than F16 activation frequency setting (the speed command A as illustrated), the activation frequency value is inputted into operation until it reaches the lower frequency setting (Section a as illustrated). If the speed command setting is greater than the lower limit setting (i.e., the speed command B as illustrated), then the operation continues to reach the speed command setting (i.e., Section b as illustrated).

◎ When the speed command setting is higher than the upper limit frequency (i.e., the speed command C), the output frequency will be limited to operate at the upper limit frequency setting (i.e., Section C as illustrated).

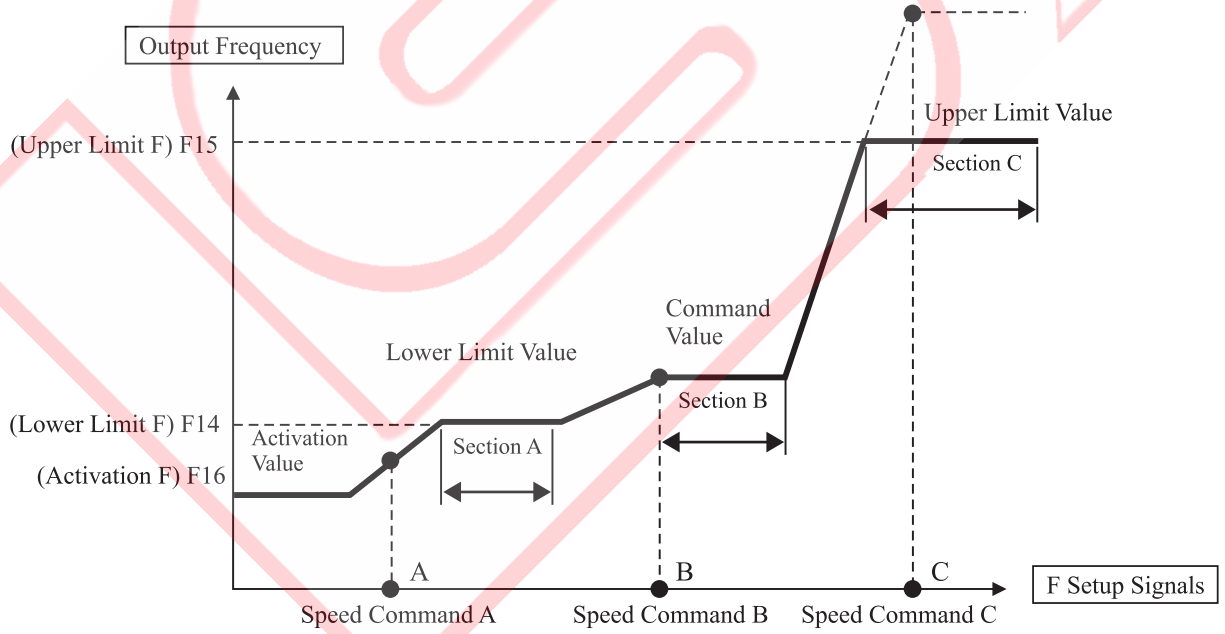

Multi-stage Speed Command Setup

Terminal Command →		Inching Command	Multi-stage Command3	Multi-stage Command2	Multi-stage Command1	Setup Range	Unit	Ex-factory Setting
F17	Master	OFF	OFF	OFF	OFF	0~400.0HZ	0.1HZ	60.0HZ
F18	Stage 1	OFF	OFF	OFF	ON	0~400.0HZ	0.1HZ	5.0HZ
F19	Stage 2	OFF	OFF	ON	OFF	0~400.0HZ	0.1HZ	10.0 HZ
F20	Stage 3	OFF	OFF	ON	ON	0~400.0HZ	0.1HZ	15.0 HZ
F21	Stage 4	OFF	ON	OFF	OFF	0~400.0HZ	0.1HZ	20.0 HZ
F22	Stage 5	OFF	ON	OFF	ON	0~400.0HZ	0.1HZ	30.0 HZ
F23	Stage 6	OFF	ON	ON	OFF	0~400.0HZ	0.1HZ	40.0 HZ
F24	Stage 7	OFF	ON	ON	ON	0~400.0HZ	0.1HZ	50.0 HZ
F25	Inching	ON	X	X	X	0~400.0HZ	0.1HZ	5.0 HZ

ATTENTION - The inching operation has the top priority over any speed from the master through Stage 7 speed, it is impossible to select any other speed for operation whenever the inching operation is executed. The inching operation relates to a one and only command that is put on top priority to execute under any source of operation command.

◎ ON and OFF indicate those commands of closed and open circuit given by external terminals.

◎ In the multi-stage operation mode, stage speed operation may be selected (up to 9 stage speeds) in the form of binary 3bit and must be done through those multi-function input terminals (F60~F65).

◎ Parameters F91~F100 may be selected for the programmable automatic operation to execute those eight stages of preset frequency. Control is done by multi-function input terminals 13: Automatic Operation and 14: Automatic Operation Control suspended, and the operation display status operation 29 allows display of cycle counts and the stage number of the speed executed. For related operation on time and rotation direction of the motor, refer to Parameters F93~F100.

	Internal Time Allotment	Multi-stage Speed				
F26	Acceleration time 1	Master /Stage 8 Speed	Stage 4 / 12 Speed	0.1~1200.0	0.1 Sec	10.0 Sec
F27	Deceleration time 1			0.1~1200.0	0.1 Sec	10.0 Sec
F28	Acceleration time 2	Stage 1 / 9 Speed	Stage 5 / 13 Speed	0.1~1200.0	0.1 Sec	10.0 Sec
F29	Deceleration time 2			0.1~1200.0	0.1 Sec	10.0 Sec
F30	Acceleration time 3	Stage 2 /10 Speed	Stage 6 /14 Speed	0.1~1200.0	0.1 Sec	10.0 Sec
F31	Deceleration time 3			0.1~1200.0	0.1 Sec	10.0 Sec
F32	Acceleration time 4	Stage 3 / 11 Speed	Stage 7 / 15 Speed	0.1~1200.0	0.1 Sec	10.0 Sec
F33	Deceleration time 4			0.1~1200.0	0.1 Sec	10.0 Sec
F34	Inching Acceleration Time			0.1~1200.0	0.1 Sec	5.0 Sec
F35	Inching Deleceleration Time			0.1~1200.0	0.1 Sec	5.0 Sec

◎ The time duration set for acceleration or deceleration determines the increasing or decreasing speed of output frequency. F122: rated frequency is the reference frequency for the acceleration or deceleration of time.

◎ There are four sets of independent acceleration/deceleration time settings available for the allotment of internal acceleration/deceleration time (as shown in the table given above) either by Parameter F40 or through those multi-function input terminals (F60~F65 functions 9: Acceleration/Deceleration Time 1, and 10: Acceleration/Deceleration Time 2).

◎ Inching acceleration/deceleration time settings are only available for the operation at inching speed.

CAUTION

Shorter acceleration/deceleration time may cause danger of transient overload current or overload voltage; improper adjustment will cause the ac drive to trip, damaged or burnt out.

F36	Acceleration curvature	0~100%	1%	0%
F37	Acceleration curves intersection point	0~100%	1%	50%
F38	Deceleration curvature	0~100%	1%	0%
F39	Deceleration curves intersection point	0~100%	1%	50%

◎ Settings for acceleration/deceleration linear, curve and S curve changes can be adjusted by applying acceleration/deceleration curvatures and acceleration/deceleration curves intersection point depending on the requirements of the machine to effectively reduce the impacts on the system when the ac drive starts or stops.

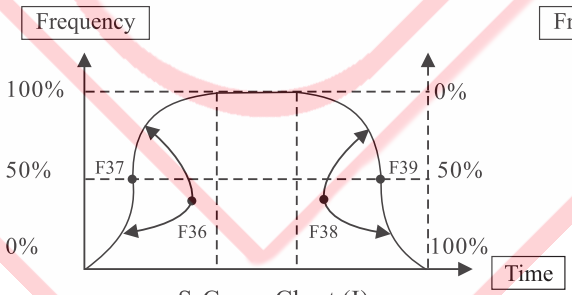

S-Curve Chart (I)

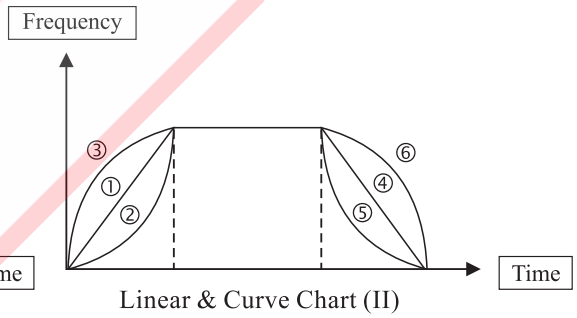

Linear & Curve Chart (II)

◎ Amplitudes of acceleration/deceleration and the curves intersection point can be respectively set through F36~F39.

Example 1 : F36(curvature)=1～100%
(Curvature features protrusion at top and recess at bottom)
F37 (intersection point)= 50%
(Adjusting upper and lower intersection points)
F38 (curvature)= 1～100%
(curvature features protrusion at top and recess at bottom)
F39 (intersection point) = 50%

Example 2 : When ① F36=0%, ④ F38=0% the curve relates to a linear one, and F37 and F39 are disabled.
② F36=1～100%，F37=100%
⑤ F38=1～100%，F39=0%
③ F36=1～100%，F37=0%
⑥ F38=1～100%，F39=100%

Parameter	Description	Range	Unit	Ex-factory Setting
F40	Multi-stage acceleration/ deceleration time allotment	0~2	1	0

◎ Four independent sets of acceleration/deceleration time are available to allow combined application through three types of internal and external allotment.

■ **0: All Internal Allotment** – Acceleration/deceleration time is assigned for the use by stages 16 preset of speed through the existing allotment mode already fixed. (Refer to F26~F33 table or Table 1 given below.)

■ **1: Half Internal Allotment and another Half External Terminals** – Master speed through Stage 3 speed are respectively allotted internally based on the individual acceleration/deceleration time; and stage 4 speed through stage 7 speed are freely used and controlled through external multi-function input terminals to be set by binary 2bit. (Refer to Table 1 or Table 2.)

■ **2: External Terminals** – Acceleration/deceleration time of eight stages of speed are all controlled by multi-function input terminals to be edited by binary 2bit. (Refer to Table 2.)

(Table 1)

Multi-stage Speed / Acceleration /Deceleration	Master	Stage 1	Stage 2	Stage 3	Stage 4	Stage 5	Stage 6	Stage 7
	Stage 8	Stage 9	Stage 10	Stage 11	Stage 12	Stage 13	Stage 14	Stage 15
0：Internal Allotment	1	2	3	4	1	2	3	4
1：Internal/External Allotment	1	2	3	4	External (Multi-function digital input) terminals			

(Table 2)

Digital Terminal / Acceleration/ Deceleration Time	DIn	DIn
	2	1
Acceleration/Deceleration 1	OFF	OFF
Acceleration/Deceleration 2	OFF	ON
Acceleration/Deceleration 3	ON	OFF
Acceleration/Deceleration 4	ON	ON

Analog Frequency Commands

Parameter	Description	Range	Unit	Ex-factory Setting
F41	Operator Analog AV : 0V bias Ratio	-300.00~300.00	%	0.00%
F42	Operator Analog AV : 5V Gain Ratio	-300.00~300.00	%	100.00%

◎ Parameters F41 and F42 are used to define the knob (VR)/AV analog signal command setting of the operator. The bias ratio corresponding to Parameter F41/0V may be set up a set of negative bias to avoid noise interference at 0V, or for the application by other control; Parameter F42/5V is related to gain frequency and will be subject to F15 upper limit frequency at the optimal output. (Refer to those examples of five basic curves given below.)

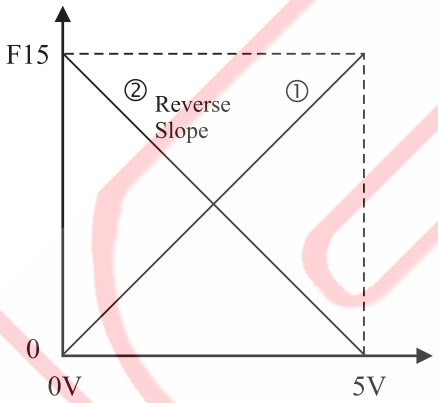

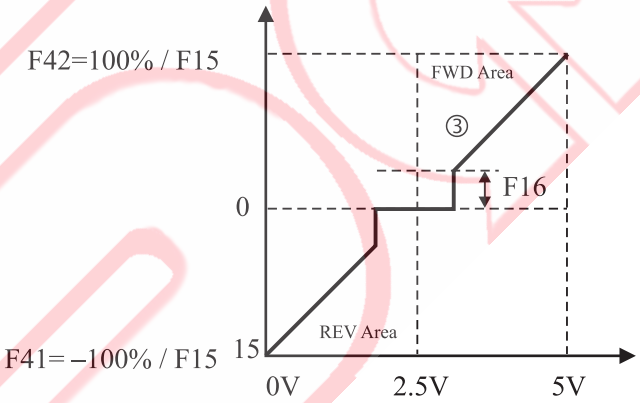

	Curve ①	Curve ②	Curve ③
F5 Speed Command Source	2 : AV/5V	2 : AV/5V	2 : AV/5V
F13 Rotation Direction	1 : FWD only	1 : FWD only	3 : REV with negative bias
F15 Upper Limit Frequency	60HZ	60HZ	60HZ
F16 Activation Frequency	0HZ	0HZ	3HZ
F41 Operator AV:0V Bias Ratio	0.0%	100%	-100%
F42 Operator AV:5V Gain Ratio	100%	0.0%	100%

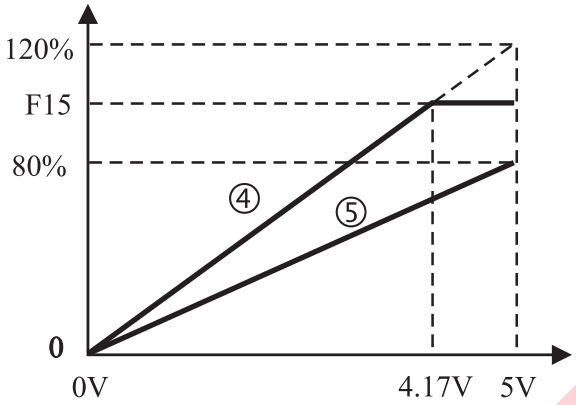

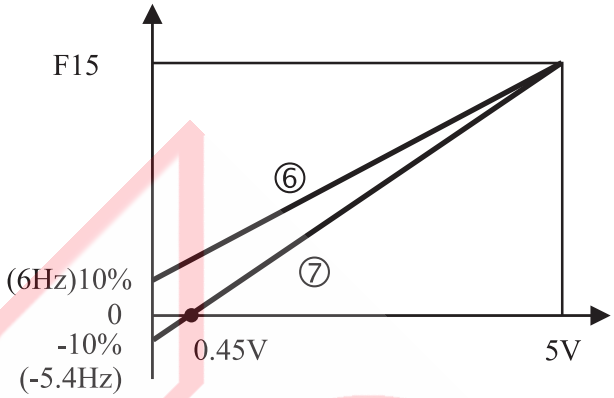

* 1. Maximum AV output F = (F15) upper limit frequency × (F42) Gain ratio
2. If the maximum AV output frequency is greater than the setting for (F15) upper limit frequency, the latter will govern the maximum output (e.g., Curve ④).

* 1. Bias Frequency = (F15) upper limit frequency × (F41) bias Gain ratio (e.g., Curve ⑥)
2. Negative bias voltage = (AV) 5V/ [(F41) × 10% + (F42) × 100%] × (F41) × 10% (e.g., Curve ⑦).

	Curve ④	Curve ⑤	Curve ⑥	Curve ⑦
F5 Speed Command Source	2 : AV/5V	2 : AV/5V	2 :AV/5V	2 : AV/5V
F15 Upper Limit Frequency	60HZ	60HZ	60HZ	60HZ
F41 Operator AV:0V bias Ratio	0.0%	0.0%	10%	-10%
F42 Operator AV:5V Gain Ratio	120%	80%	100%	100%

F43	Analog Voltage AV1: -10 Gain Ratio	-300.00~300.00	%	-100.00%
F44	Analog Voltage AV1:10V Gain Ratio	-300.00~300.00	%	100.00%
F45	Analog Voltage AV1 Dead Band Voltage	0.00~50.00	%	0.00%
F46	Analog Voltage AV1 Zero-point Output Gain	0.00~50.00	%	0.00%
F47	Analog Voltage AV1 Maximal Output Limit	10.00~100.00	%	100.00%

◎ 1. Parameters F43~F47 relate to the applied parameter group for analog input terminals AV1 (0~±10V), and the Parameter F13 is set at =3: REV with negative bias to be available for speed control and FWD/REV direction control.

◎ 2. F45 set for dead band voltage allows effective prevention from noise interference when operating at 0V since such interference may cause the ac drive from precise stop of its operation resulting in the operation of the motor to swing between FWD and REV.

◎ 3. Parameters F46 and F47 relate to AV1 analog input signals to allow the zero-point output and maximum output settings through A/D converter controlled parameter module output.

◎ 4. Dead Band voltage = ± 10 Vdc ∗ (F45) ∗ 10% ÷ [(F44)% - (F43)-%] ÷ 2

◎ 5. Zero-point output frequency = (F15) upper limit frequency ∗ (F46)%

◎ 6. Maximum output frequency = (F15) upper limit frequency ∗ (F47)%

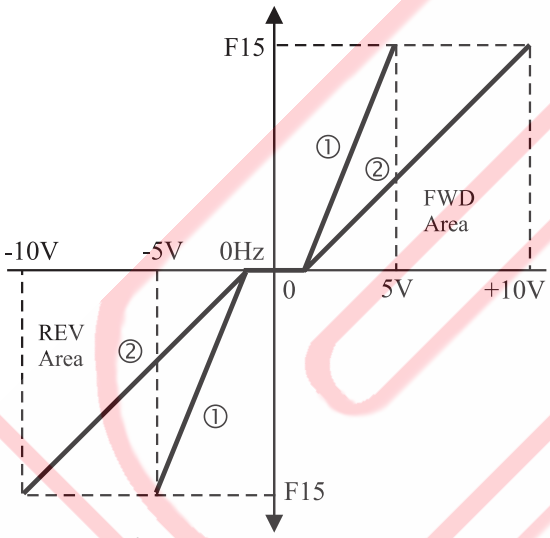

Fig. 1

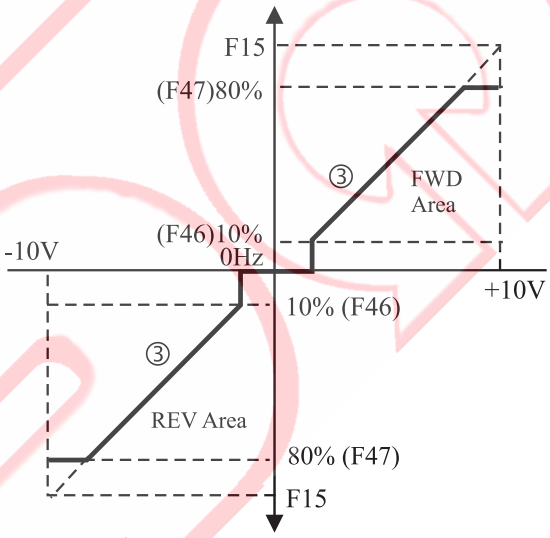

Fig. 2

*** Refer to the Description Given Below According to the Chart Given Above：**

	Curve ① Fig. 1	Curve ② Fig. 1	Curve ③ Fig. 2
F5 Speed Command Source	3 : AV1/±10V	3 : AV1/±10V	3 : AV1/±10V
F13 Rotating Direction Limit	3 : REV with negative bias	3 : REV with negative bias	3 : REV with negative bias
F15 Upper Limit Frequency	60HZ	60HZ	60HZ
F43 -10V:Negative Gain Ratio	-200%	-100%	-100%
F44 10V: Gain Ratio	200%	100%	100%
F45 Dead Band Voltage	10%	10%	10%
F46 Zero-point Output Gain	0.0%	0.0%	10%
F47 Maximal Output Limit	100%	100%	80%

Parameter	Description	Range	Unit	Ex-factory Setting
F48	Analog Voltage AV2：0 Bias Ratio	-300.00~300.00	%	0.00%
F49	Analog Voltage AV2:10V Gain Ratio	-300.00~300.00	%	100.00%
F50	Analog Voltage AV2: Dead Band Voltage	0.00~50.00	%	0.00%
F51	Analog Voltage AV2 Zero-point Output Gain	0.00~50.00	%	0.00%
F52	Analog Voltage AV2 Maximal Output Limit	10.00~100.00	%	100.00%
F53	AI：0mA(or 0V) Bias Ratio	-300.00~300.00	%	0.00%
F54	AI：20mA(or 0V) Gain Ratio	-300.00~300.00	%	100.00%
F55	AI Dead Band Voltage	0.00~50.00	%	0.00%
F56	AI Zero-point Output Gain	0.00~50.00	%	0.00%
F57	Analog current AI, Maximal Output Limit	10.00~100.00	%	100.00%

◎ Voltage signals of Analog input terminals AV2 (0~10V) and current (or voltage) signals of AI (0~20mA or 0~10V) are two individual sets of analog signal parameter groups of the same operation.

◎ Inputs of analog signal made through parameters of Input Bias Ratio (F48, F53), Gain Raito (F49, F54), and Dead Band Voltage (F50, F55) are sufficient to cope with different control requirements for parameter setup; and may set up the zero-point output (F51, F56) and maximum output limit (F52, F57) through parameters under the control of A/D converter.
(Refer to examples of 11 types of basic curves.)

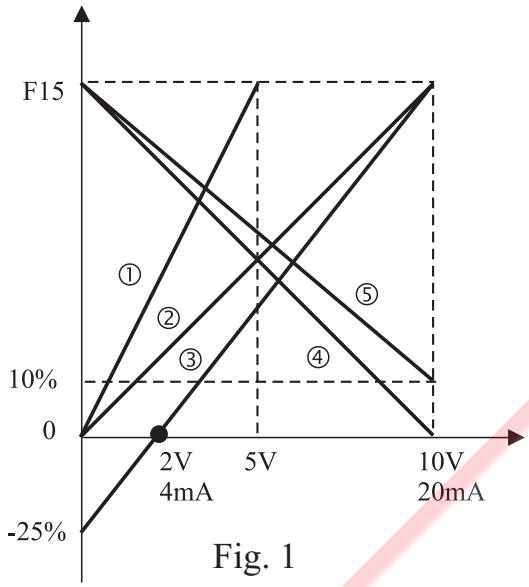

Fig. 1

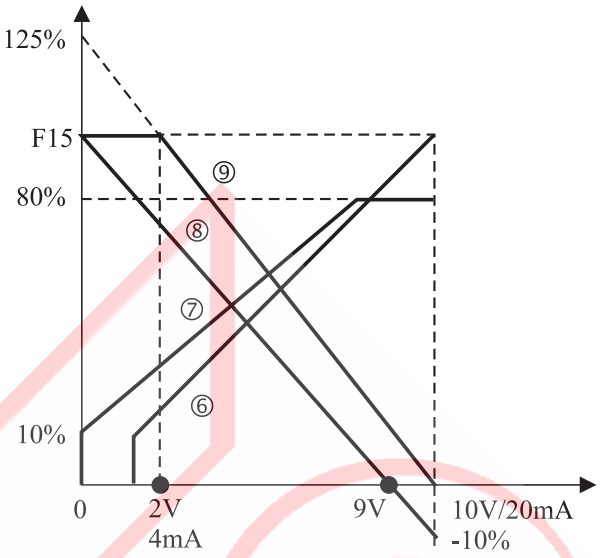

Fig. 2

*** Refer to the Description Given Below According to the Chart Given Above Fig. 1:**

	Curve ①	Curve ②	Curve ③	Curve ④	Curve ⑤
F5 Speed Command Source	4:AV2/10V	4:AV2/10V	4:AV2/10V	4:AV2/10V	4:AV2/10V
F15 Upper Limit Frequency	60HZ	60HZ	60HZ	60HZ	60HZ
F48、F53 0V(0mA)Bias Ratio	0.0%	0.0%	-25%	100%	100%
F49、F54 10V(20mA) Gain Ratio	200%	100%	100%	0.0%	10%
F50、F55 Dead Band Voltage	0.0%	0.0%	0.0%	0.0%	0.0%
F51、F56 Zero-point Output Gain	0.0%	0.0%	0.0%	0.0%	0.0%
F52、F57 Maximum Output Limit	100%	100%	100%	100%	100%

*** Refer to the Description Given Below According to the Chart Given Above Fig. 2:**

	Curve ⑥	Curve ⑦	Curve ⑧	Curve ⑨
F5 Speed Command Source	4:AV2/10V	4:AV2/10V	4:AV2/10V	4:AV2/10V
F15 Upper Limit Frequency	60HZ	60HZ	60HZ	60HZ
F48、F53 0V(0mA)Bias Ratio	0.0%	0.0%	100%	125%
F49、F54 10V(20mA) Gain Ratio	100%	100%	-10%	0.0%
F50、F55 Dead Band Voltage	10%	0.0%	0.0%	0.0%
F51、F56 Zero-point Output Gain	10%	10%	0.0%	0.0%
F52、F57 Maximum Output Limit	100%	80%	100%	100%

Multi-Function Input Terminal

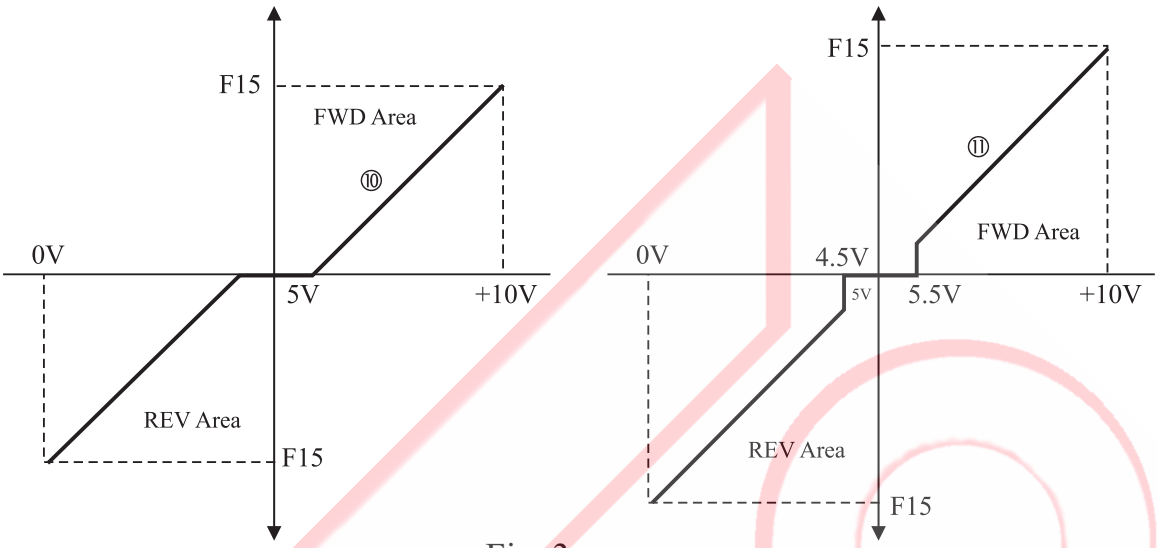

Fig. 3

*** Refer to the Description Given Below According to the Chart Given Above Fig. 3 :**

	Curve ⑩	Curve ⑪
F5 Speed Command Source	4:AV2/10V	4:AV2/10V
F13 Rotation Direction Limit	3:REV with negative bias	3:REV with negative bias
F15 Upper Limit Frequency	60HZ	60HZ
F48、F53 0V(0mA)Bias Ratio	-100%	-100%
F49、F54 10V(20mA) Gain Ratio	100%	100%
F50、F55 Dead Band Voltage	10%	10%
F51、F56 Zero-point Output Gain	0.0%	10%
F52、F57 Maximum Output Limit	100%	100%

F58	Digital Terminal Scan Cycle	1~5000	1 = 0.2ms	10×0.2ms=2ms

◎ This function filters the multi-function input terminals to prevent CUP malfunction due to noise interference or switching ejection.

◎ The scan cycle of this function will affect the response time of the multi-function input terminal. The user is advised to make proper adjusting of the setting as applicable.

◎ Scan time = setting × 0.2 ms (1 ms =10^{-3} s)

Parameter	Description	Range	Unit	Ex-factory Setting
F59	DI1, DI2, Setup	0.1	Non	0

◎ This function sets up only terminals DI1 and DI 2, and only corresponding to 2-way operation controls and adaptation to the multi-function 1: 3-way Operation (DI3) control. All other functions do not fall with the operation scope of DI1 and DI2.

■ **F59=0 : 2-Way Control- DI1(FWD/STOP), DI2(REV/STOP).**

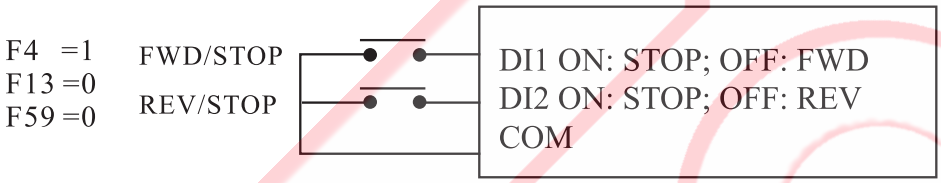

■ **F59=1 : 2-Way Control- DI1(RUN/STOP), DI2(FWD/REV).**

■ **F60=1 : 3-Way Control Operation** (DI3), (Any input terminals from DI3~DI8 may define this function in conjunction with DI1, DI2 terminals of F59.)

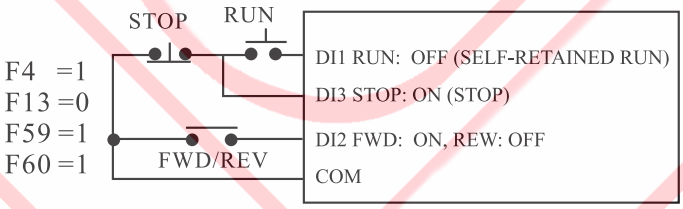

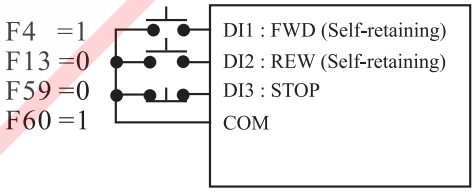

Parameter	Designation	Description	Range	Unit	Ex-factory Setting
F60	DI3 Setup	◎ Multi-function input terminals may be set up for particular use as desired. To apply such function Refer to description of function. ◎ No specific sequence is specified for the function of these six terminals; however, the setting should never be repeated with the exception of the setting of 0: Disabled.	0 | 21	1	2
F61	DI4 Setup				4
F62	DI5 Setup				5
F63	DI6 Setup				6
F64	DI7 Setup				9
F65	DI8 Setup				18

■ **0: Disabled** – This function allows the function input terminal function to be in the states of being disabled, thus to prevent any malfunction for cause not identified.

■ **1:3-Way Control** – (Refer to 3-way control wiring diagram). RUN terminal relates to internally latched contact-a terminal; STOP terminal, contact-b terminal to release RUN from its latched status. FWD and REV may be switched between each other as desired.

■ **2:Input in Case of External Abnormality (NO)** – relates to Contact-b in case of external normal status; and Contact-a in case of abnormality, the ac drive trips to stop outputting.

■ **3:Input in Case of External Abnormality (NC)**- relates to Contact-a in case of external normal status; and Contact-b in case of abnormality,the ac drive trips to stop outputting.

■ **4:RESET** – When the ac drive trips due to abnormality, RESET command is used to release the abnormality status.

INHIBIT

Never operate the RESET command in a constantly closed (ON) status.

■ **5 : Multi-stage command 1**	Multi-stage commands 1, 2, 3 and 4 may be in the format of binary 4-bit edited into 16-stage speed for operation control. (Refer to Table 1, P5-20.)
■ **6 : Multi-stage command 2**	
■ **7 : Multi-stage command 3**	
■ **8 : Multi-stage command 4**	

■ **9: Inching Operation** – Once executed, the inching command has priority over any other speed command; therefore, it is impossible to select any other type of speed operation while the inching operation is being executed.

■ **10 : Acceleration/Deceleration Time Command 1**
■ **11: Acceleration/Deceleration Time Command 2**

◎ If different acceleration/deceleration gradient changes are required in the process of acceleration or deceleration for any frequency; the terminal function may be applied for required control. (Refer to Table 2, P5-20), or

◎ Alternatively in any process of acceleration or deceleration for a frequency at any stage of speed, the terminal function may be applied to exercise various changes of gradient within four sets.

Multi-stage command Terminal (N1) / 16-Stage Preset Speeds	DIn Multi-Stage Command 4 $2^3 = 8$	DIn Multi-Stage Command 3 $2^2 = 4$	DIn Multi-Stage Command 2 $2^1 = 2$	DIn Multi-Stage Command 1 $2^0 = 1$
Master Speed	OFF	OFF	OFF	OFF
Stage 1 Speed	OFF	OFF	OFF	ON
Stage 2 Speed	OFF	OFF	ON	OFF
Stage 3 Speed	OFF	OFF	ON	ON
Stage 4 Speed	OFF	ON	OFF	OFF
Stage 5 Speed	OFF	ON	OFF	ON
Stage 6 Speed	OFF	ON	ON	OFF
Stage 7 Speed	OFF	ON	ON	ON
Stage 8 Speed	ON	OFF	OFF	OFF
Stage 9 Speed	ON	OFF	OFF	ON
Stage 10 Speed	ON	OFF	ON	OFF
Stage 11 Speed	ON	OFF	ON	ON
Stage 12 Speed	ON	ON	OFF	OFF
Stage 13 Speed	ON	ON	OFF	ON
Stage 14 Speed	ON	ON	ON	OFF
Stage 15 Speed	ON	ON	ON	ON

(Table 1)

Binary Function Terminal 2 / Acceleration /Deceleration Tim	2 DIn	1 DIn
Accleration / Deceleration 1	OFF	OFF
Accleration / Deceleration 2	OFF	ON
Accleration / Deceleration 3	ON	OFF
Accleration / Deceleration 4	ON	ON

(Table 2)

Note 1:
Din represents the definition given to any digital terminal input DI1~DI8.

■ **12: Master Speed Increase** – The master speed frequency increase signal is entered from the multi-function terminal and its rate to be determined by F26 and F58.

■ **13: Master Speed Decrease** –The master speed frequency decrease signal is entered rom the multi-function terminal its rate to be determined by F27 and F58.

◎ These two functions may be set by function terminal to provide external control over the frequency of the master speed. They permit two-way operation with the function [increase (⮝) and decrease (⮟)] from the operator; however, the control priority for F5 Speed Command must be set at 0; Operator.

■ **14: Automatic Operation** – when automatic operation is effectively set, its priority is next higher to the inching command.

■ **15:Auto Operation Suspended**

◎ When the programmable automatic operation function is selected and the function terminal is activated, the ac drive starts to execute the sequential operation according to the preset 8-stage speed frequency. The operation may be suspended by using the function of Suspension Terminal and resumed when the suspension is over. If the operation is resumed by turning off the Automatic Operation Terminal, the operation procedure starts to execute from the original point.

■ **16: Counter Signal Input** – The width of the trigger-off signal shall not be less than 2ms while paying attention to the setting of the related Parameter F58.

■ **17: Counter Zero-in**

◎ External trigger-off signal may be applied with this function terminal, such as an access switch. The signals from photo-sensor detector are inputted into Counting Terminal for the ac drive to count. If the counts must be cleared off and zeroed in, Zero-in Terminal is applied to achieve the purpose.

Multi-function Output Terminal

- **18: Free Run Stop** – When the function terminal signal is inputted, the ac drive immediately turns off its output for the motor to coast to stop due to the system friction .
- **19: Save Energy Operation** – When the function terminal signal is inputted, the ac drive starts to perform internal operation to control the operation at an optimal efficiency setting. (For details, refer to F104.)
- **20: Second Unit PID** – to activate the internal 2nd PID parameter control mode (F168~F171).
- **21: Enabling PID** – PID control module is activated by the input from the multi-function terminal. (For details, refer to F157).

Parameter	Designation	Description	Range	Unit	Ex-factory Setting
F66	Relay1 Setup	◎ No specific setup sequence is specified for the function of these six output terminals. Upon selecting the function, read first the description and related requirements of the function.	0 | 11	1	1
F67	DO1 Setup				11
F68	DO2 Setup				6
F69	DO3 Setup				7
F70	Relay 2 Setup				3

- **0: Disabled** –This function allows the output terminal function to be in the states of being disabled.
- **1: Output in Case of Abnormality (NO)** – In case of any abnormality detected by the ac drive, the contact is in closed status.
- **2: Output in Case of Abnormality (NC)** – If any abnormality is detected by the ac drive, or CPU is losing POWER, this contact turns into open status. The normal output is closed status.
- **3: In Operation** – When the ac drive enters into standby mode or is in operation, this contact is in closed status.
- **4: Frequency Attained 1** – When the output frequency of the ac drive reaches Specified Frequency 1 (F72), this contact is in closed status.
- **5: Frequency Attained 2** –When the output frequency of the ac drive reaches Specified Frequency 2 (F73), this contact is in closed status.
- **6: Consistent Frequency** – When the output frequency of the ac drive is consistent with the setting for the Master Speed through Stage 7 frequency, the range to judge the consistent frequency is set by (F71), and this contact within that range is in closed status. (Unsuitabe application On the Analog signal speed command)

■ **7: Overload Alarm** – When the ac drive detects output overload, this contract is in closed status. The OL value = (F121) Rated current of the Motor × (F84) OL Current Gains.

■ **8: OL Timing Forecast** – When the multiplication value of electronic thermal sensor built in the ac drive has reached 80% of the time of trip-off level, this contact is in closed status. The OL level is set with (F84); and the multiplication time, with (F85).

■ **9: Counter Cycle is Up** – When the ac drive is performing external count and the numeric value of the counting is equal to the setting of F75, this contact is in closed status, and then clear the numericvalue to restart counting.

■ **10: Comparator Counting is Up** –When the ac drive is performing external count and the numeric value of the counting is equal to the setting of F76, this contact is in closed status, and then clear the numeric valueto restart counting.

■ **11: Zero-Speed Detected** – When the ac drive is in downtime or the frequency set is smaller than the setting of the minimum activation frequency, this Contact is in closed status.

F71	Frequency Attained 1	0~10.0HZ	0.1HZ	1.0

◎ When the output frequency falls between the frequency setup range of ±F71 the output multi-function terminal remains at ON status.

F72	Frequency Attained 1	0~400.0HZ	0.1HZ	60.0
F73	Frequency Attained 2	0~400.0HZ	0.1HZ	60.0
F74	Magnetic Stagnation Width Attained	0~10.0HZ	0.1HZ	1.0

◎ When the output frequency is higher than the setting of the Frequency Attained, the multi-function output terminal set will remain in ON status; when the output frequency drops to the Magnetic Stagnation width below the Frequency Attained, the multi-function output terminal is in OFF status

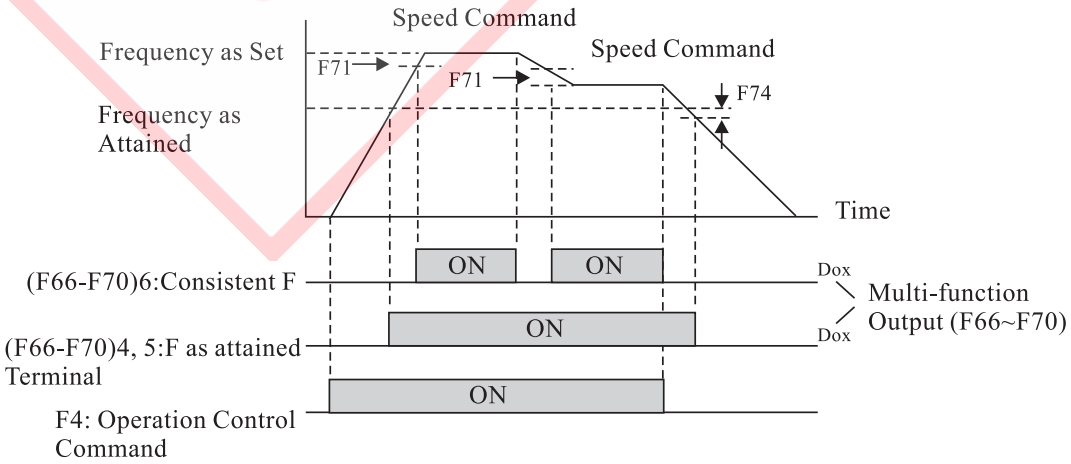

Jumping Frequency

Parameter	Description	Range	Unit	Ex-factory Setting
F75	Counting Cycle	0~30000	1P	1000

◎ This parameter is applied to set up the counting cycle of the built-in counter. Once the counting reaches the preset value of the counting cycle, any multi- function output terminal may be selected to trigger the terminal output (Fig.1).

F76	Comparative Counting	0~30000	1P	500

◎ This parameter is applied to set up the comparison value of the built-in counter. Once the counting reaches the preset value of the counting cycle, any multi-function output terminal may be selected to trigger the terminal output to enter into ON status, and then enter into OFF status until the F75 counting cycle setting is up (Fig. 1).

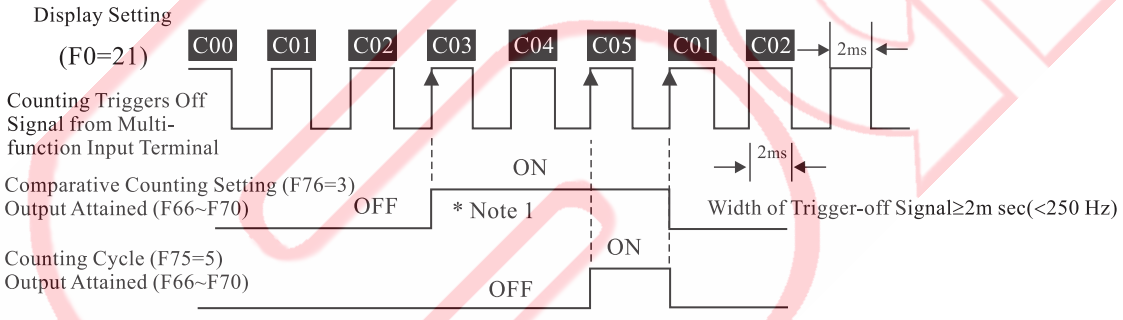

(Fig.1)

* Note 1: Attention to description and setting of Parameter F58 is urged.

F77	Frequency Skip 1	0~400.0HZ	0.1HZ	0.0
F78	Frequency Skip 2	0~400.0HZ	0.1HZ	0.0
F79	Frequency Skip 3	0~400.0HZ	0.1HZ	0.0
F80	Frequency Skip Width	0~10.0HZ	0.1HZ	0

◎ Functions of Frequency Skip and Frequency Skip Width are exclusively provided to avoid resonance to the mechanical system under certain frequency, where it is unavoidable to pass through during acceleration or deceleration, and operation under such frequency is strictly prohibited.

◎ If the frequency skip width is set at 0Hz, all the frequency-skip points are void.

◎ Frequency skip conditions must satisfy F77≦F78≦F79, and the operation must be provided in sequence as set. Skip frequencies respectively at Points 1, 2, 3 may be partially or entirely overlapped to increase the operation of bandwidth from different segments, and to serve as the frequency skip area for one point or two points.

Protection Setup

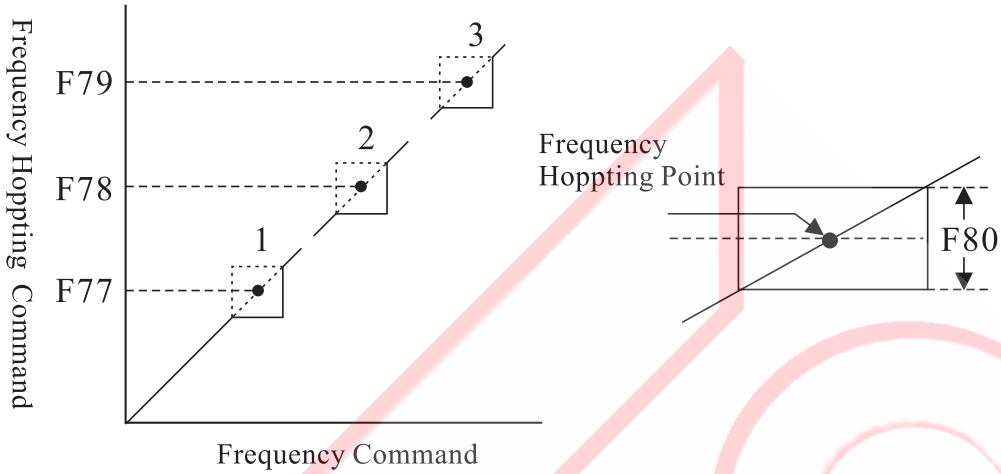

F81	Stall Prevention	0,1	1	0

■ **0 : Not Activated** –Function to prevent of stall due to over voltage and over current is disabled.

■ **1 : Activation** – Function to prevent of stall due to over voltage and over current is activated.

F82	Stalling voltage Setup	1.00~1.25	0.01	1.10

◎ In performing deceleration, the ac drive will stop decelerating (output frequency suspended from decreasing) due to rising DC bus voltage when the motor regenerates energy into the ac drive due to the high motor load inertia; The ac drive will continue to perform deceleration only when the dc bus voltage falls below the setting.

◎ Stalling Voltage Level = (F109) Mains input voltage × 1.414 × (F82) Stalling Voltage %.

[Example]: Stalling Voltage Level = 220VAC × 1.414×110% = 342VDC

F83	Stalling Current Setup	0.50~2.50Pu	0.01Pu	1.50

◎ In performing acceleration, theca drive will stop the acceleration (output frequency is suspended from increasing) when the output current increase from the ac drive is over the setting of the stalling current level due to fast acceleration or overload of motor; and the ac drive continues to accelerate only when the current falls below the setting.

◎ Stalling current level = (F121) Motor Rated Current × (F83) Stalling Current Gain.

[Example]: Stalling Current Level = 4A × 150% = 6.0A

WARNING

The upper limit of stalling current should never be two-fold higher than the rating of the ac drive.

F84	Overload Current Level	1.00～2.50Pu	0.01Pu	1.50
F85	Overload time	0.1～120.0 Sec	0.1 Sec	60.0

◎ When rated capacity of ac drive is higher than motor's capacity, please has to imput exact rated capacity of motor into parameter F120-F125 to avoid motor be burned out by higher capacity of ac drive leads to higher current.

◎ This parameter provides electronic thermal overload protection to protect the motor from overheating while taking the protection for insufficient cooling ability of the motor operated at lower speed into consideration.

◎ The ac drive output load maintains the current, and Overload Time allowance timer is immediately activated when the current becomes greater than the setting of the overload current level.

◎ Overload Current Level = (F121) Motor Rated Current × (F84) OL Current Gain Level.

F86	Leakage current outputted or unbalanced 3-phase output current	0.001~0.500Pu	0.0 1Pu	0.100

◎ This function is provided to prevent poor wiring or poor motor insulation on the output side of the ac drive. When the sum of the 3-phase current on the output side (U.V.W) of the ac drive becomes greater than the abnormality level setting, abnormal earth leakage is judged.

F87	Over Temp. Protection Setup	60.0~95.0℃	0.01℃	85.00

◎ This function is provided to detect the temperature protection level of the built-in heat sink. Once the setting is challenged, the ac drive trips to protect from overheating

F88	Fans Activating Temp. Setup	30.0~45.0℃	0.01℃	40.00

◎ Upon Power ON, the fans automatically run for one (1) minute and then reverts to the control by the fans activation temperature setting.

◎ The fans are forced to operate once the temperature of the built-in heat sink becomes greater than the temperature setting to activate the fans.

F89	Automatic Voltage Regulation (AVR)	0,1	1	0

■ **0: Disabled** - AVR is disabled while the output (U.V.W) voltage varies depending on the source voltage level inputted.

Automatic Operation Function

■ **1: Activation** – AVR is activated for the output voltage.

◎ When the the main input power is higher than (F101) Maximun Output Voltage (U.V.W), the voltage regulator automatically maintains the voltage under the setting given in F101 for the motor to provide stable torque output while preventing drastic increase of torque due to temperature rise. However, once the input source is lower than the F101 setting, the output voltage varies depending on the level of the input voltage.

INHIBIT

Never activate AVR for the setting 5: Closed Loop Flux Vector Control or the setting 6: Sensorless Flux Vector Control in (F126) Control Mode.

F90	Dynamic Braking Activated	0, 1	1	0

■ **0: Disabled** –Dynamic Braking is disabled.

■ **1: Activation** – With the ac drive operating, and BUS voltage (Vdc) greater than 120%, the built-in dynamic braking is activated.

[Example] : (F109)Mains input voltage 220Vac×1.414×120% = 373 Vdc discharge level.

WARNING

Built-in Dynamic Braking has been provided for the ac drive of 7.5 KW or less. External braking unit must be provided for ac drive of other Hp spec.

F91	Automatic Operation	0~4	1	0

■ **0: Disabled** – Automatic operation is disabled.

■ **1: Reciprocal Fashion** – to perform reciprocal automatic operation from Master Speed through Stage 7 Speed.

◎ Reciprocal Fashion Performed – Master Speed→ Stage 1 Speed … Stage 7 Speed → Stage 6 Speed … Master Speed → Master Speed … etc, and then the operation is continued in reverse order to complete a cycle of a total of 16 speeds. The number of cycle times is set by F92 and displayed with the stage speed monitor. The ac drive automatically stops once the setting of cycle times is up.

■ **2: Cyclic Fashion** – to perform automatic operation clockwise from Master Speed through Stage 7 Speed.

◎ Cyclic Fashion Performed – The automatic operation is performed clockwise from Master Speed … Stage 1 Speed …Stage 7 Speed→Master Speed→Stage 1 Speed …etc. It is repeated clockwise with the number of cycles to be set by F92 and displayed on the stage speed monitor together with the number of cycles and stage speed. The ac speed automatically stops when the setting of cycle times is up.

Magnetic Flux Setup

- **3: Master Speed after Reciprocation** – this function is performed same as that described in the setting of 1: Reciprocal fashion with the exception that the master speed frequency operates upon the expiry of the number of cycles.
- **4: Master Speed after Circulation**– this function is performed same as that described in the setting of 2: Cyclic fashion with the exception that the master speed frequency operates upon the expiry of the number of cycles.

WARNING

Once Automatic Operation setup is done , the execution is subjected to the programmed mode of the multi-function input terminals 13: Automatic Operation and 14: Automatic Operation Suspended. The automatic operation control is second in priority to the inching function while the Operation Control and speed Command fails to execute operation control (settings 1~4 enable activation of automatic operation).

F92	Number of Cycles	1~2000	1	1

◎ This function defines the number of operation cycles needed in automatic operation.

F93	Stage 1 Time & Direction	-30000~30000 Sec.	1 Sec.	10
F94	Stage 2 Time & Direction	-30000~30000 Sec.	1 Sec.	10
F95	Stage 3 Time & Direction	-30000~30000 Sec.	1 Sec.	10
F96	Stage 4Time & Direction	-30000~30000 Sec.	1 Sec.	10
F97	Stage 5 Time & Direction	-30000~30000 Sec.	1 Sec.	10
F98	Stage 6 Time & Direction	-30000~30000 Sec.	1 Sec.	10
F99	Stage 7 Time & Direction	-30000~30000 Sec.	1 Sec.	10
F100	Stage 8 Time & Direction	-30000~30000 Sec.	1 Sec.	10

◎ To set the operation time and direction by the stage speed enabled. The setting of negative value is for operation in reverse direction and operation time counts; and the setting of positive value is for forward direction and operation time counts. Refer to the setting given in F13 if FWD and REV operation control is required.

◎ Frequency of any stage of speed may be set at 0Hz in the course of performing the stage speed in automatic operation to provide the function of stop by timer; and the frequency of any stage speed may be set to be disabled by setting the automatic operation time at 0 sec to skip to the frequency of the next stage speed.

F101	Maximum Output Voltage (U.V. W)	.50～1.00X	0.01Pu	0.90

◎ The range of the input voltage to the ac drive may be of AC180V~240V or 380V~480V. The maximum output voltage may be set by this parameter function for the maximum rms voltage to compensate for the rated voltage of the motor. Maximun output voltage = (F109) input voltage x F101(0.90pu) setting value.

*** The setting for F101 maximum output voltage at 1.00 is optimum when (F126) control mode is selected at 2: Open Loop V/F vector Control, 3: Closed Loop V/F vector Control, or 4: Sensorless V/F vector Control.**

*** ATTENTION! The maximum output voltage should not be greater than 90% and the internal must be done with adjustment of magnetic filed control function if 5: Closed Loop Flux Vector Control or 6: Sensorless Flux Vector Control is selected from (F126) control mode. Any setting greater than 90% will be made at the cost of voltage compensation efficiency, and even resulting in tripping. The optimum setting is 0.9 (90%).**

F102	V/F Maximum Voltage Frequency	0.50~2.00	0.01Pu	1.00

◎ The setting of output voltage, frequency of ac drive has to be comply with motor's normal rated. [Max. voltage frequency (1.0) will be based on F122 : rated frequency].

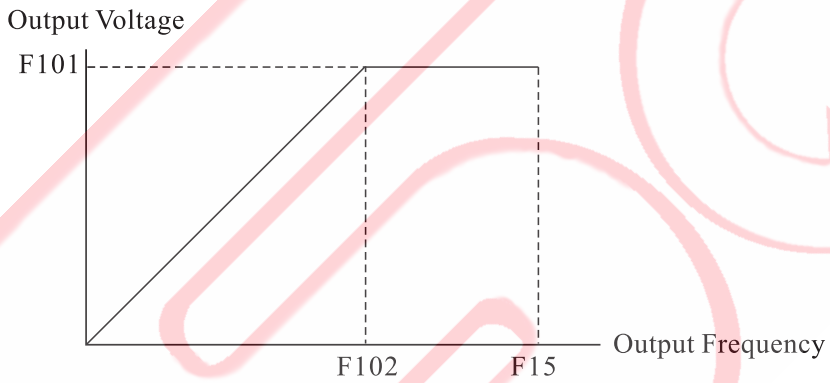

Maximal Output Voltage and Frequency (V/F)

F103	V/F Curve Select	-10~50	1	0

◎ The relation between output voltage and output frequency is defined in terms of square decrease, linear or square increase changes as illustrated below.

◎ With the setting of 0, it relates to a linear V/F curve applicable to the load of a constant torque.

◎ With the setting selected from the range of –1 ~ -10, it relates to square decrease V/F curve, applicable to blower and pump.

◎ With the setting elected from the range of 1 ~ 5, it relates to square increase V/F curve.

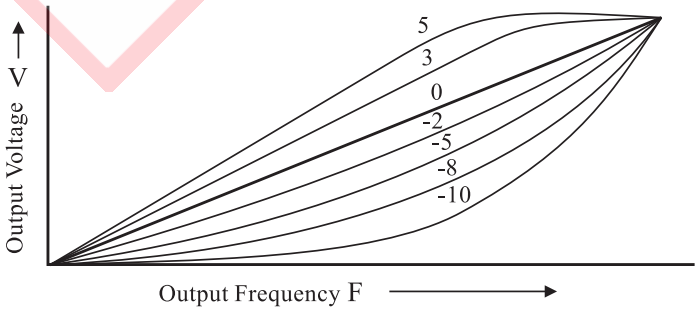

Parameter	Description	Range	Unit	Ex-factory Setting
F104	Save Energy Control Mode	0~2	1	0

◎ Upon activating the function of save energy control and the operation is at full voltage during acceleration/deceleration; the optimum output power will be automatically controlled by the load power during the operation at constant speed while the output speed is under monitor without stalling.

*** Recommendation: In selecting the save energy control function from (F126) control mode, 5: Closed Loop Flux Vector Control and 3: Closed Loop V/F vector Control are preferred; followed by 4: Sensorless V/F vector Control and 6: Sensorless Flux Vector Control; while 2: Open Loop V/F vector Control fails to perform economy control.**

*** ATTENTION! This function is not applicable to any system with sudden and frequent load changes, or load already approaching the full load (rated) operation during the operation.**

■ **0: Normal Mode** – motor operation controlled in normal mode without activating economy control.

■ **1: Save Energy Control Mode** – economy control command to be controlled by internal calculation.

■ **2: External Terminal Control** – economy control command to be controlled by external terminal input signals.

F105	V/F Torque Compensation Mode	0~2	1	1

■ **0: Disabled** – no torque compensation is provided.

■ **1: Setup Compensation Activated** – compensation activated with the amount to be set up by (F106).

■ **2: Automatic Torque Compensation** – Upon detecting the resistance and feedback current signals from the motor, the ac drive performs automatic torque compensation control.

◎ The torque compensation mode is only applicable to 2: Open Loop V/F vector Control, 3: Closed Loop V/F vector Control, and 4: Sensaorless V/F vector Control in (F126) Control Mode.

F106	V/F Torque Compensation Setting	0~.200Pu	0.001Pu	0.020

◎ This function provides the means for proper adjustment of the corresponding output voltage at 0Hz so as to improve the torque performance of the motor as demonstrated in the lower speed area.

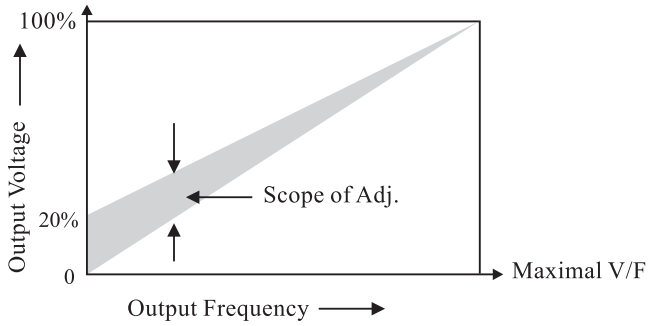

AC Drive parameters

◎ Excessive adjustment will cause high motor current resulting in overload, and further leading to the activation of functions (F83~F85) of output limiting current. Therefore, confirm the output current value displayed under F0=12 before making the adjustment of F106 for the optimum setting.

◎ Unless otherwise specified, 3Hz sis sufficient to activate the motor to run in the V/F control mode.

F107	PWM Modulation Method	1~2	1	1

■ **1: 3-Phase Modulation** – Use of 3-phase modulation driven motor obtains the smoothest current output and comparatively quiet operation.

■ **2: 2-Phase Modulation** – 2-phase modulation technology allows the time reduction of the IGBT On/Off operation , thus reducing the switching loss.

◎ Excessively long wiring for the motor is prone to reflective voltage feedback (tidal effects) from the motor, and this acts as additional load to the ac drive (power loss). In such case, the use of 2-phase modulation driven motor and lower setting of F108 carrier frequency would help to reduce the refective motor voltage, harmonics, and EMI problem.

* **ATTENTION! If the wiring length has to be made not less than 50M, AC Drive grade motor with higher voltage rating capability of its insulation is strongly recommended since excessive long cables will create greater parasitic induction, and higher multiple voltage loops. These can easily damage the motor insulation and the ac drive.**

* **RECOMMENDATION – An output reactor should be installed whenever the wiring on the output side of the ac drive is 25M or longer (refer to P2-8).**

F108	PWM Switching Frequency	2000~16000Hz	1HZ	5000

◎ This parameter sets up the carrier frequency in PWM output.

◎ The setting level of the carrier frequency will affect the EM noise of the motor, switching loss of the IGBT and the heat dissipation due to switching loss as stated in the table given below:

Carrier F	Motor Noise	Switching Loss	Heat Dissipation	Torque	Harmonics
2KHz	High	Low	Low	High	Low
↕	↕	↕	↕	↕	↕
16KHZ	Low	High	High	Low	High

METER 1 Waveform Output

Parameter	Description	Range	Unit	Ex-factory Setting
F109	Mains Input Voltage (rms)	180Vac~500Vac	1V	200/400V

◎ This parameter defines the standard input power supply voltage to the ac drive. The ac drive would determine all related voltage working levels and voltage protection levels according to this parameter.

Low Voltage Level = AC in × 1.414 × 70%
Over Voltage Level = AC in × 1.414 × 130%
Brake Level = AC in × 1.414 × 120%

◎ The setting value of F109 needs to be lower or equal to F120 x 1.2; Namely F109=220V, F120=184V to be as min. rated voltage of motor.

F110	METER 1 Output	0, 1	1	0

■ **0: PWM Pulse Output** – DC voltage is output to the FM1 terminal with the maximum range of DC0~10V/1mA.

■ **1: Pulse Frequency Output** – Pulse frequency output equivalent to the output frequency x multiplying factor (F111) is output to the FM1 terminal.

F111	Meter 1 Pulse Frequency Multiplying Factor	1~36X	1	1

◎ Pulse frequency = output frequency × multiplying factor of pulse (with the maximum output of the pulse frequency at 1.25 KHz).

F112	PWM1 Output Mode Options	0~17	1	1

◎ An analog DC voltage DC0~10V/1mA signal output by means of PWM pulse can be used to monitor the following 17 operation status settings of the ac drive. (providing the same functions as that by F0: Operator Display Status).

Setting	Function (100% Implication)	Setting	Function (100% Implication)
0	No output	9	Torque Voltage
1	Motor Output Speed	10	Output Current
2	Feedback Speed 1	11	Excitation Current Command
3	Feedback Speed 2	12	Torque Current Command
4	Sensorless Vector Output Speed	13	Excitation Current
5	Source Frequency	14	Torque Current
6	Slip Frequency	15	True Power
7	Output Voltage	16	Reactive Power
8	Excitation Voltage	17	PID% Output

METER 2 Waveform Output

Parameter	Description	Range	Unit	Ex-factory Setting
F113	PWM1 Display Variable Multiplying Factor/10V	.50~8.00	0.01Pu	1.00

◎ This function is applied to adjust the multiplying factor of the analog output of full voltage (Output Voltage (Vdc) = 10V ÷ F113 Variable Multiplying Factor).

F114	PWM1 Display Variable Polarity Setup	0, 1	1	0

◎ Polarity setup is essentially done with DC5V as the potential point at "0". Accordingly, any voltage greater than DC5V relates to FWD speed signal; and smaller than DC5V relates to REV speed signal. This function is applicable only to the display of output frequency or speed); therefore, any other function given with the polarity setup is of no significance.

- **0: Without Polarity** –with 0V as the reference point, and with no capability to identify FWD and REV.
- **1: With Polarity** – with 5V as the reference point, and with the capability to identify FWD and REV.

F115	METER2 Output Format	0, 1	1	0
F116	Meter 2 Pulse Frequency Multiplying Factor 2	1~36	1	1
F117	PWM2 Output Mode Options	0~17	1	10
F118	PWM2 Display Variable Multiplying Factor/10V	.50~8.00	0.01Pu	1.00
F119	PWM2 Display Variable Polarity Setup	0,1		0

◎ Refer to Meter1 parameter functions as Meter2 parameter functions given in F115 ~ F119 above are the same as that provided by METER1.

F120	Rated Voltage (rms)	180Vac~500/Vac	1V	N(Note 1)
F121	Rated Current (rms)	1.5A~130.0A	0.1A	N(Note 1)
F122	Rated Frequency	50.0HZ~70.0HZ	0.1HZ	N(Note 1)

◎ Rated voltage, rated current and rated frequency set as above for the type of the motor are related to parameter functions of the ac drive driven motor. (N1: N=ex-factory setting varies according to the respective ac drive used)

*** F120~F125 related to the parameter group are to set up the nameplate of the motor; settings must be defined according to those rated settings on the motor nameplate.**

*** Motor parameters must be known for application in vector control mode. Correct parameter settings give the better motor speed response and torque characteristics curves.**

*** When the capacity of drive is bigger than the motor, the setting of F121 has to be bigger than rated current of drive divided 9. (F121>the drive rated current ÷9)**

Control Mode

Parameter	Description	Range	Unit	Ex-factory Setting
F123	Rated Speed	0~4200rpmc	1rpm	N(N1)

◎ This parameter is related to the rated speed of the motor.

◎ In vector control, the ac drive uses this parameter setting as reference to calculate the compensation for the slip speed. The running speed will not drop due to excessively large load on the motor, as automatic speed regulation control is provided to maintain constant speed.

F124	HP	0.5~50.0HP	0.1HP	N(N1)

◎ This parameter is related to the output rated power of the motor.

F125	Number of Poles	2,4,6,8,10,12 Pole	2 Pole	N(N1)

◎ Setting is defined with the number of poles of the motor.

◎ With v/f control, synchronous speed of the motor is achieved to correctly display the speed.

◎ With vector control, the ac drive uses the setting of this parameter as reference to perform the speed vector control calculation.

F126	Control Mode Setup	0~6	1	2

- **0: Electric Motor Parameter Auto-tuning** – the electric characteristics of the motor can be automatically calibrated through the auto-tuning of the static and dynamic parameters built in this parameter at F133~F137.
- **1: Mechanical Motor Parameter Auto-tuning** – The mechanical inertia constant of the motor can be automatically calibrated by automatically setting up the mechanical constant value (F138) through the auto-tuning function of dynamic parameters built in parameter F138.
- **2: Open Loop V/F vector Control** – the ac drive outputs SVPWM waveform to the motor.
- **3: Closed Loop V/F vector Control** – The encoder mounted on the motor performs speed feedback for slip compensation so that the speed of the motor follows the speed command closely in high precision speed control.
- **4: Sensorless V/F vector Control** – relates to the voltage type sensorless controller, whereby the voltage command and feedback current signal are applied to estimate the stator magnetic flux and determines the slip for making the frequency compensation.
- **5: Closed Loop Flux Vector Control** – relates to a current type closed loop (attached with PG) vector controller, to provide similar servo drive control with high precision speed response and torque control.

Encoder Setup

■ **6: Sensorless Flux Vector Control** – relates to a current type sensorless vector controller, whereby the current command and feedback current error are applied to provide torque current compensation, The torque characteristics in the lower speed area using this mode outperforms the voltage control type, and provided smaller speed slip.

PROMPT: The application of 6: Sensorless Flux Vector Control Mode must fall with the high speed [approximately 90%~120% of the motor rated speed] where speed precision is the essence. Set up the following Parameter groups upon completing the electric parameter calibration:

1. F101 = 0.80~0.90
2. F108 = 6K~8K[Carrier Frequency]

F127	Speed Feedback	0, 1	1	0

■ **0: No Feedback** – Speed feedback disabled.

■ **1: Encoder 1** – to perform speed feedback control to the master controller.

F128	Encoder 1 Output	600~2500 P/rev	1 P/rev	1024

◎ Set the correct number of pulses per revolution to enable precise speed control.

F129	Encoder 1 Direction	-1 , 0 , 1	1	1

■ **0: Single Phase Feedback** –Single-phase feedback allows only one-direction operation

■ **-1: B leads A** – the motor operates in REV direction.

■ **1: A leads B** – the motor operates in FWD direction.

F130	Encoder 2 Output	600~2500 P/rev	1 P/rev	1024

◎ Encoder 2 is the slave encoder of speed freedback command to perform precise speed follow-up operation.

◎ Whenever fast response is required, the acceleration or deceleration time of the ac drive in follow-up operation must be set at its minimum.

F131	Encoder 2 Direction	-1,0,1	1	1

■ **0: Single Phase Feedback** – Single-phase feedback allows only one-direction operation

■ **-1: B Leads A** – Motor operates in REV direction.

■ **1: A Leads B** – Motor operates in FWD direction.

◎ Confirmation of the initial direction by A or B allows smooth FWD, REV and follow-up operation.

Parameter	Description	Range	Unit	Ex-factory Setting
F132	Encoder 2 Multiplying Factor	0.01~7.50X	0.01X	1.00

◎ Preset multiplying factor and adaptation with Encoder 1 allows precise linked operation by ratio.

*** F127~F132: Relates to the encoder setup group, an encoder speed feedback card interface board provided with two sets of control interface to perform high precision speed control must be installed**

*** Encoder 1 – Relates to the master encoder to perform speed feedback. Encoder mounted to the motor is connected to the interface board of Encoder 1 to perform speed feedback, and speed error compensation so as to achieve high precision speed control.**

*** Encoder 2 – Related to the encoder of the follow-up speed, signal from its encoder operates as a speed command for the encoder from another slave ac drive in conjunction with a master encoder 1 to perform precise speed synchronisation operation or synchronized operation by ratio.**

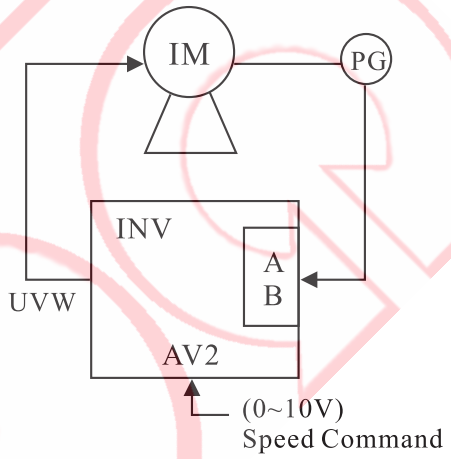

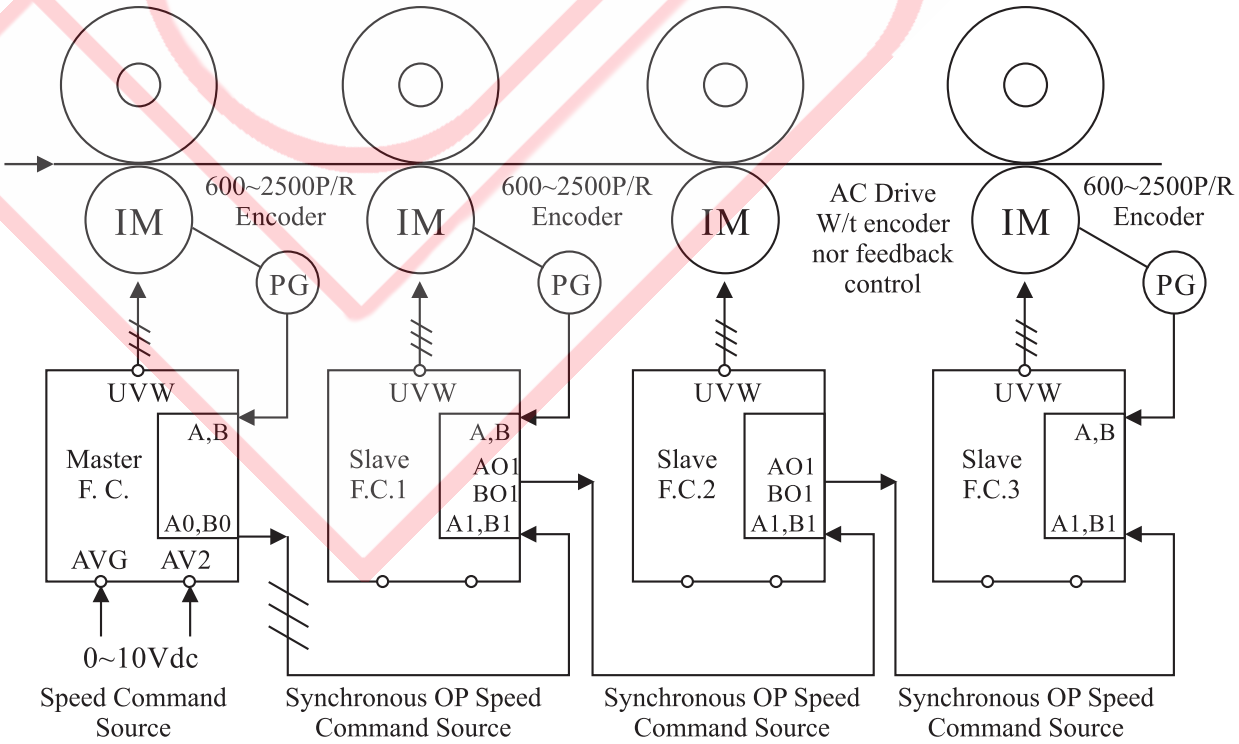

Application Example: Universal Digital Synchronizer System Operation in Series

MOTOR Electric Parameters

Parameter	Description	Range	Unit	Ex-factory Setting
F133	Stator Resistance	6500~32767	1	20000
F134	Rotor Resistance	6500~32767	1	16000
F135	Stator Inductance	6500~32767	1	18000
F136	Mutual Inductance	6500~32767	1	17500
F137	Rated Rotor Resistance	-32767~32767	1	16000

*** This parameter group can be automatically set by F126 Control Mode-Electrical Parameter Auto-tuning Function. Modification of the setting by user is not required.**

If the auto-tuning fails, manually enter the Parameters F133, F134, F135 and F136. Obtains the four parameters from the Motor manufacturer, respectively Rs: Stator Resistance, Rr: Rotor Resistance, Ls: Stator Inductance, and Lm: Mutual Inductance.

EXAMPLE: motor manufacturer provides the parameters：Rs=0.3Ω Rr=0.303Ω
Ls=Lr=0.0477H Lm=0.0456H
Motor Ratings： 220 V, 14 A, 60 Hz

$$V_{base} = 220\sqrt{2}/\sqrt{3} = 179.63 \quad (\text{volt})$$
$$I_{base} = 14\sqrt{2} = 19.8 \quad (\text{A})$$
$$\omega_{base} = 2\pi\ 60 = 377 \ (rad/s)$$

$$R_{base} = V_{base}/I_{base} = 9.07\,(\Omega)$$
$$L_{base} = R_{base}/\omega_{base} = 0.02406\ (H)$$

$$\overline{R}_s = \frac{R_s}{R_{base}} * 2\text{^}18 = 0.0331 * 2\text{^}18 = 8677 \ldots\ldots (F133)$$

$$\overline{R}_r = \frac{R_r}{R_{base}} * 2\text{^}18 = 0.0334 * 2\text{^}18 = 8755 \ldots\ldots (F134)$$

$$\overline{L}_s = \overline{L}_r = \frac{L_s}{L_{base}} * 2\text{^}13 = 1.9825 * 2\text{^}13 = 16240 \ldots\ldots (F135)$$

$$\overline{L}_m = \frac{L_m}{L_{base}} * 2\text{^}13 = 1.8953 * 2\text{^}13 = 15526 \ldots\ldots (F136)$$

Note: In the calculation, 2^13 and 2^18 are constants in format Q and shall not be changed. (2^13=8192, and 2^18=262144)

Estimation Tester & Speed PI Control Parameters

Parameter	Description	Range	Unit	Ex-factory Setting
F138	Motor Inertia	0~30000	1	1500

◎ To determine the rotor inertia of the motor. (Motor rotor inertia calibration must be when F126:5 Closed Loop Flux Vector Control is used).

F139	Magnetic Flux Bandwidth	4.0~10.00HZ	0.1HZ	4.0

F140	Speed Bandwidth	1.0~6.0HZ	0.1HZ	4.0

F141	Slip Compensation Gain	10~200%	1%	88

◎ If the load to motor increases, the motor reduces its speed resulting in greater motor speed difference. The function of slip compensation gain is to overcome the speed slip due to load change of the motor so as to maintain a constant speed.

F142	Scalar Speed Control P Gain	0~100%	1%	30
F143	Scalar Speed Control I Gain	0~100.0%	0.1%	20.0

◎ The scalar speed PI control is to provide operation compensation for (F126) Control Mode – 3: Closed Loop V/F vector Control operation.

F144	Vector Speed Control P Gain	0~100%	1%	40
F145	Vector Speed Control I Gain	0~100.0%	0.1%	20.0

◎ The vector speed PI control is to provide operation compensation for (F126) Control Mode – 5: Closed Loop Flux Vector Control operation.

F146	Sensorless Speed Control P Gain	0~100%	1%	30
F147	Sensorless Speed Control I Gain	0~100.0%	0.1%	15.0

◎ Sensorless speed PI control is to provide compensation for (F126) Control Mode – 6: Sensorless Flux Vector Control operation.

◎ PI Control: PI control is the combination of (P) Proportional Control and (I) Integral Control to make the compensation of its control variables depending on the magnitude of its variation , and the changes in time.

Magnetic Filed Oriented Control Block Chart

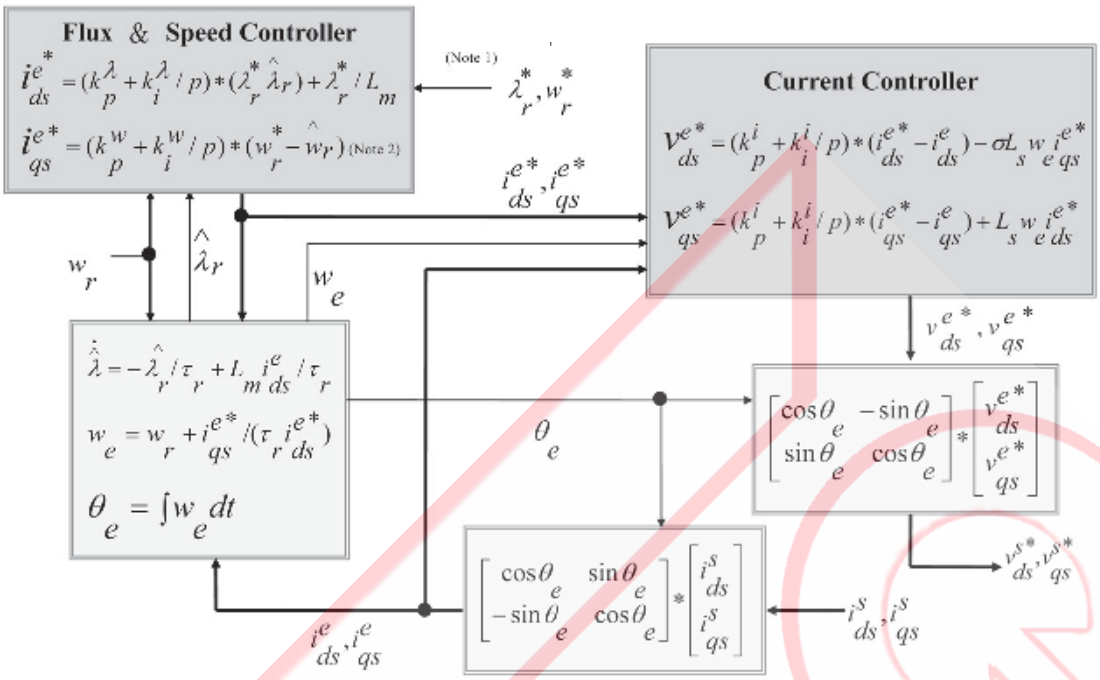

Note 1: The formula to solve magnetic field current is resident in the software and prevents from any alternation.

Note 2: The formula to solve speed PI is adjusted by F144 and F145.

PI Speed Control Parameters Mathematical Calculation Chart

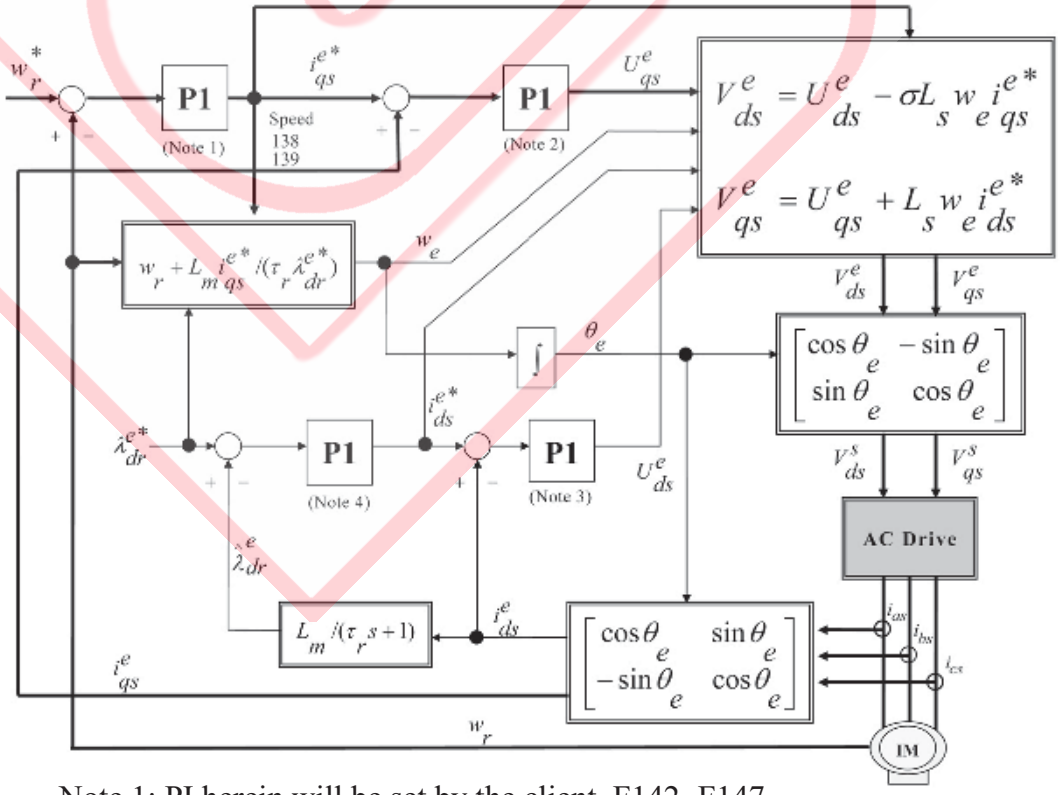

Note 1: PI herein will be set by the client, F142~F147.

Notes 2, 3, and 4: All resident in the software that prevent from any alternation.

Abnormaility Record

Parameter	Description	Range	Unit	Ex-factory Setting
F148	Torque Current Limit	0~1.250	0.001	1.000

◎ To set the torque current of the maximum load output from the ac drive.
Torque currente =Ac drive Rated Output Current (rms)x(F148) Torque Current Limit Setting.

◎ Torque current limit is provided only for two types of (F126) control modes setup operation, (1) F126=5: Closed Loop Flux Vector Control, and (2) F126=6: Sensorless Flux Vector Control. The other control modes do not have torque control function.

F149	Torque Current Input Option	0~5	1	0

◎ To set up the option of torque control command input from the following four analog input signals and PID control torque (this function is only active under F126:5 Closed Loop Flux Vector Control mode).

- **0: Disabled** – the analog torque control is disabled.
- **1: Digital Operator AV** – Linear torque control is done by the input signal voltage (DC0~5V) from the digital operator AV.
- **2: AV1** – The torque current set by F148 corresponding to input signal voltage (DC0~±10V) from the external terminal AV1 is applied to perform the linear torque control.
- **3: AV2** – The torque current set by F148 corresponding to input signal voltage (DC0~10V) from the external terminal AV2 is applied to perform the linear torque control.
- **4: AI** –The torque current set by F148 corresponding to input signal current (0~20mA) or voltage (DC0~10V) from the external terminal AI is applied to perform the linear torque control.
- **5: PID Control** – to perform torque PID feedback control. (Refer to PID Parameter Group F157-F171).

F150	Current Alarm Record	0~40	1	0
F151	Last 1st Alarm Record	0~40	1	0
F152	Last 2nd Alarm Records	0~40	1	0
F153	Last 3rd Alarm Record	0~40	1	0
F154	Last 4th Alarm Record	0~40	1	0
F155	Last 5th Alarm Records	0~40	1	0
F156	Alarm Records Cleared	0,1	1	0

◎ Clear the Alarm trips stored in the memory.

- **0: Not Cleared.**
- **1: Cleared.**

Err Code	Description of Alarm Report
Err0	Digital operator communication failure
Err 1	Over voltage or current in standby status
Err 2	Over voltage or current during acceleration
Err 3	Over voltage or current during deceleration
Err 4	Over voltage or current during speed regulation
Err 5	Heat sink overheated
Err 6	Dc Bus over voltage
Err 7	Dc Bus low voltage
Err 8	Motor Overload
Err 9	AC Drive voltage not matched to the motor voltage
Err 10	Software detected overload current protection
Err 11	AC Drive rated current range not matched to motor current
Err 12	Loss of output U-phase or U-phase C.T failure
Err 13	Loss of output V-phase or V-phase C.T failure
Err 14	Loss of output W-phase or W-phase C.T failure
Err 15	Pump low current detected
Err 16	Encoder direction opposite to the phase sequence on the output side
Err 17	Encoder signal abnormality
Err 18	Parameter detection failure
Err 23	Absence of speed feedback affecting performance of closed loop control
Err 25	EEPROM parameter read back out of range
Err 26	Digital operator storage parameter write failure
Err 27	DSP storage parameter locked and preventing modification.
Err 28	Operator storage parameter locked and preventing modification
Err 29	External input abnormality
Err 30	unbalanced three-phase output current.
Err 31	Leakage current outputted
Err 32	PUF fuse burnt out
Err 33	Power failure or too low mains input phase voltage
Err 35	Error in automatic operation time setup.
Err 36	Digital input terminal setup repeated.
Err 19，Err 20，Err 21，Err 22，Err 24，Err 34 Are signals reserved for failure.	

External PID

Parameter	Description	Range	Unit	Ex-factory Setting
F157	PID Mode	0~4	1	0

- **0: PID Disabled** – PID control not activated.
- **1: PID Stop Setting Not-Memorised** –In PID control, the final PID control value is not memorised.
- **2: PID Stop Setting Memorised** – In PID control, the final PID control value is memorised when the of operation command stops; when the operation command is reactivated, the memorised PID value acts as the initial PID value for control.
- **3: DI enabled (PID Stop Setting Not-Memorised)** –With PID control activated by the multi-function input terminal, the final PID control value is not memorised when the operation command stops.
- **4: DI enabled (PID Stop Setting Memorised)** – With PID control activated by the multi-function input terminal, the final PID control value is memorised when the operation command stops; when the operation command is reactivated, the memorised PID value acts as the initial value of PID for control.

F158	PI Setpoint Input Options	0~8	1	0

◎ Input terminal is selected to function as the PID setpoint frequency command.

Setting	Function	Description of Function	
0	PI initial value setup	PI setpoint command % value is directly set up by Parameter (F161).	
1	AV1 input	● External analog frequency command input terminal sets the setpoint value. ● Gain of analog frequency command is adjusted by Parameters F43~F57.	
2	Av2 input		
3	AI input		
4	Encoder 2 feedback value	● Input of external setpoint value of pulse signal (option card PG-AB2) frequency command is set up by Parameters F128~F132.	
5	Encoder 1 feedback value		
6	RAMP output	● S curve Output (Acceleration/Deceleration time curvature)	
7	Total output current	$\hat{I}$	Total $\hat{I}=\sqrt{i\varnothing^2+iJ^2}$ $i\varnothing$ = Excitation current iJ = Torque current
8	Torque current	η	

F159	PI Feedback Input Options	0~8	1	0

◎ Input terminal is selected to function as the PID feedback detection source.

Setting	Function	Description of Function	
0	PI initial value setup	PI setpoint command % value is directly set up by Parameter (F161).	
1	AV1 input	● External analog frequency command input terminal sets the PI setpoint value. ● Gain of analog frequency command is adjusted by Parameters F43~F57.	
2	Av2 input		
3	AI input		
4	Encoder 2 feedback value	● External of input setpoint value of pulse signal (option card PG-AB2) frequency command is set up by Parameters F128~F132.	
5	Encoder 1 feedback value		
6	RAMP output	● S curve Output (Acceleration/Deceleration time curvature)	
7	Total output current	Î	Total $\hat{I}=\sqrt{i\varnothing^2+iJ^2}$ $i\varnothing$ = Excitation current iJ = Torque current
8	Torque current	η	

F160	Derivative Feedback Input Options	0~8	1	0

◎ Input terminal is selected to function as the Derivative feedback input.

Setting	Function	Description of Function	
0	PI Error	Error resulted from the PI setpoint and measured value sets the Derivative feedback input	
1	AV1 input	● External analog frequency command input terminal sets the derivative input value. ● Gain of analog frequency command is adjusted by Parameters F43~F57.	
2	Av2 input		
3	AI input		
4	Encoder 2 feedback value	● Input of external setpoint value of pulse signal (option card PG-AB2) frequency command is set up by Parameters F128~F132.	
5	Encoder 1 feedback value		
6	RAMP output	● S curve Output (Acceleration/Deceleration time curvature)	
7	Total output current	Î	Total $\hat{I}=\sqrt{i\varnothing^2+iJ^2}$ $i\varnothing$ = Excitation current iJ = Torque current
8	Torque current	η	

*** ATTENTION ! The feedback input type of F159 and F160 shall not be the same type used for the setpoint input of F158.**

F161	PI Initial Value Setup	0.00~100.00	%	50.00

◎ This parameter sets up a fixed PI controller setpoint value or feedback value; however, both the setpoint source and the feedback source can not be set up with this function at the same time.

Parameter	Description	Range	Unit	Ex-factory Setting
F162	Derivative Filter Time Setup	0.05~10.00	Sec	0.20

◎ Derivative input is connected to a low pass filter to filter high frequency noise with the time constant τ= F162/2.3.

F163	PID Output Limit	0.00~100.00	%	100.00
F164	PID Loop 1 Kp Gain	0.00~300.00	%	100.00
F165	PID Loop 1 Ki_H Gain	0.0~3000.0	%	400.0
F166	PID Loop 1 Ki_L Gain	0.0~3000.0	%	200.0
F167	PID Loop 1 Kd Gain	0.0~3000.0	%	200.0
F168	PID Loop 2 1Kp Gain	0.00~300.00	%	100.00
F169	PID Loop 2 Ki_H Gain	0.0~3000.0	%	5.0
F170	PID Loop 2 Ki_L Gain	0.0~3000.0	%	5.0
F171	PID Loop 2 Kd Gain	0.0~3000.0	%	5.0

Kp Control: The operation gain amounts to the proportional change of output. The response gets faster when a higher gain is entered, however, excessively large gain generates output instability.The response gets slower when a smaller gain is entered. Note: The gain of the KP control should not be entered as 0.

Ki Control: The operation gain amounts to integral change of output; the effective response is achieved by having the feedback value to be same as setpoint value. The response is faster when a higher integral gain is entered; however, excessive large gain will generate output instability.

Kd Control: The operation gain amounts to the rate of output changes; This gives a faster response to any sudden change. The output change will decay faster when a higher differential gain is entered; however, excessively large gain will generate output instability.

(1) There are two units of PID parameter settings available to perform switched operation control by using the digital multi-function terminal inputs.

◎ The conversion between PID controller setpoint and feedback values is described as follows:

The speed command value set by F43~F57, the input analog voltage or current is divided by (F15) speed upper limit to give the % value.

For Example: F48=10%, F49=100%, F15=100.0Hz, AV2=2 voltage
%=100*{(2/10)*（60/100*100）+（60/100*10）}/F15=18%

4~6: % = 100× (feedback speed/speed upper limit)
7~8: % = 100× (current/current when the current detector outputs 5V)

(2) KI gains (KI_L and KI_H) at the zero-speed and the speed upper limit can be respectively set up. The settings will change proportionately according to the respective speed command changes. * (KI_L ≤ KI_H).

(3) KP gain setting corresponds to (F15) speed upper limit. KP gain is automatically adjusted within the range of the speed upper limit according to change of multiplication of KI gain.

(4) If the setting for the KI_L is the same as that given to KI_H, then both KP gain and KI gain will not vary according to the speed.

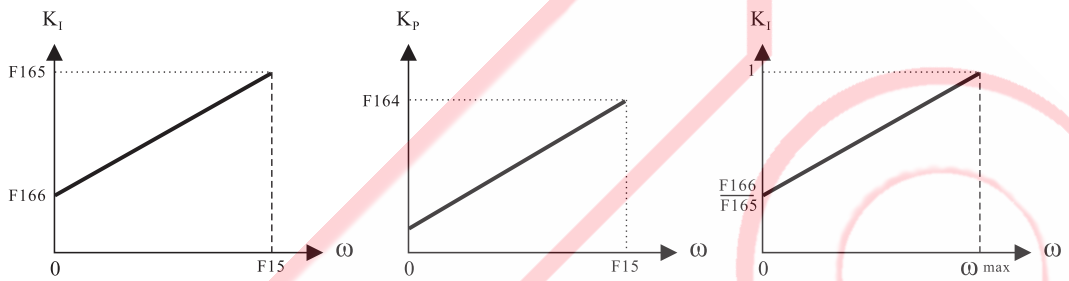

(5) KD gain will not change according to speed command.

(6) When PID output acts as the speed command, 100%=F15 (speed upper limit).

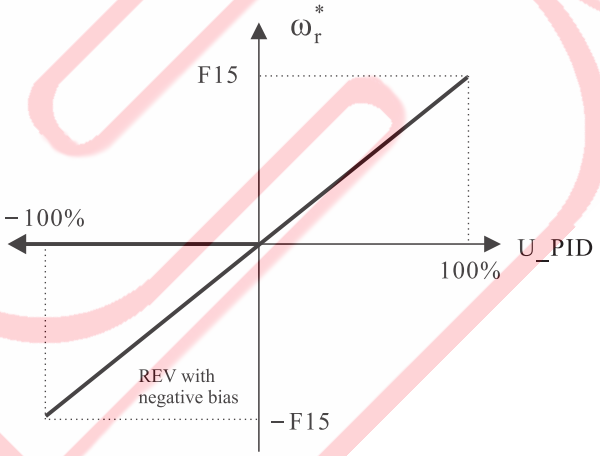

(7) When the PID output acts as the torque current limit, 100% = F148 (Limit current)

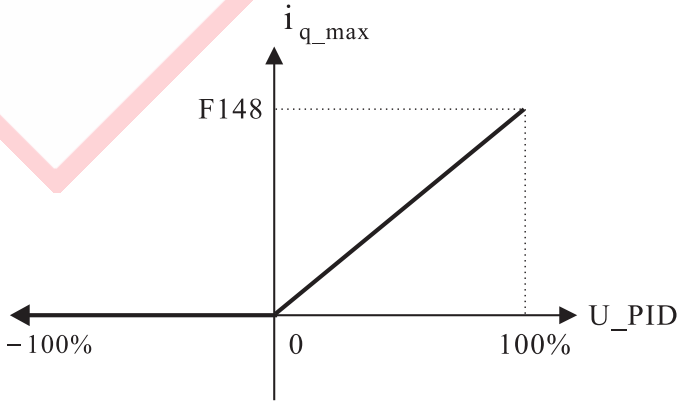

PIDControl Block Chart:

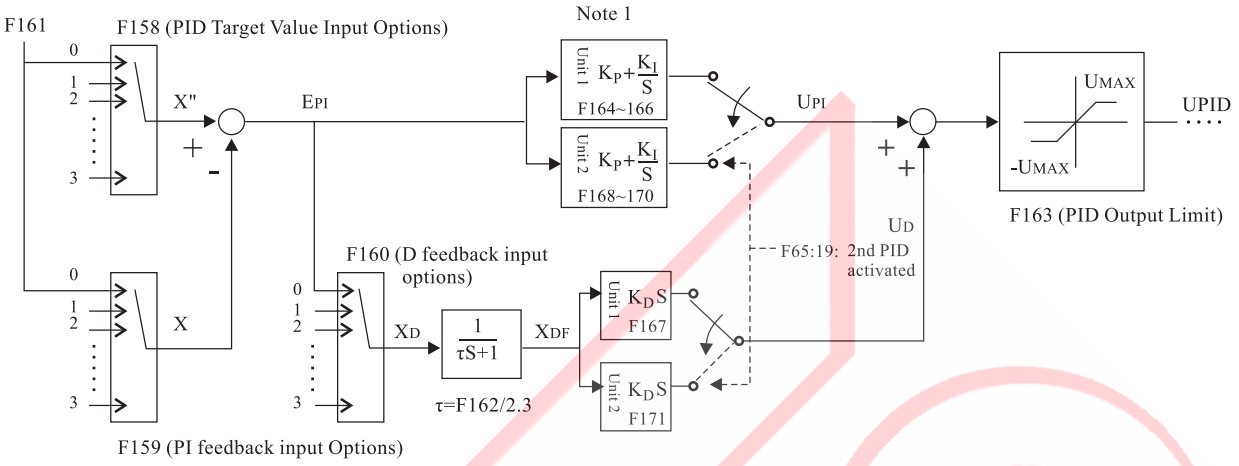

Note 1: ex-factor (PI) integration time (5~10 Sec.)

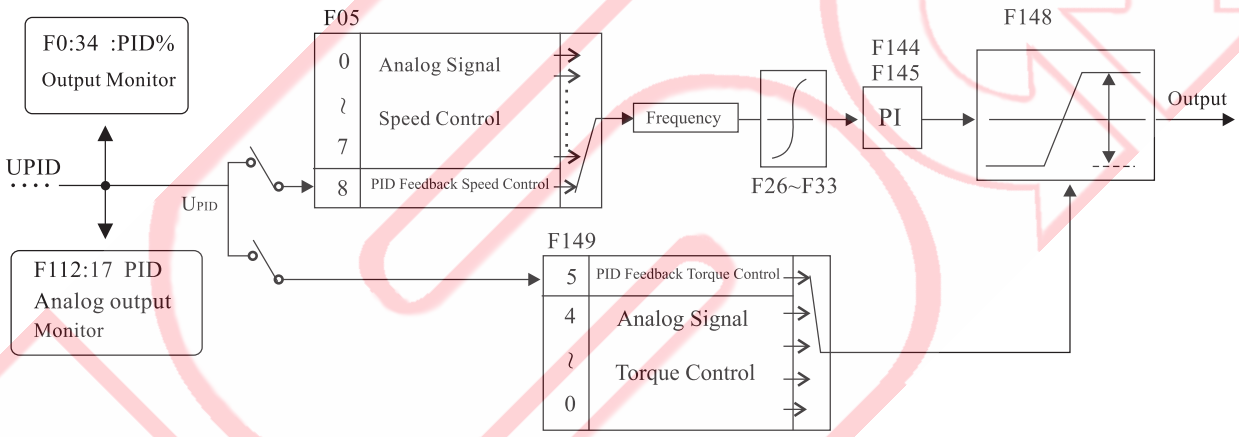

F172	Kp Analong Adjustment	0~4		0
F173	Ki Analog Adjustment	0~4		0

- **0:No adjustment**
- **1:Operator AV Input**
- **2:AV1 Input**
- **3:AV2 Input**
- **4:AI Input**

◎ Control of gains of Kp and Ki may be done by selecting the input control from those four analogy input ends. For charactreistics of analog signals, please refer to Parameters F41~F57.

◎ In Kp and Ki controls for analog operation, a set of ideal Kp(164) and Ki(165) operation region values must be first set so that the operation of analog signals can be done in a regional range with better response.

PC Communication

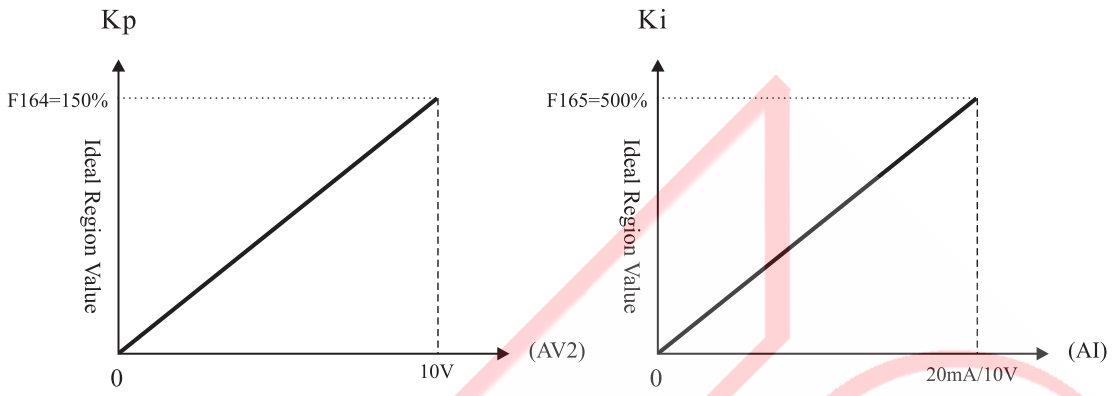

◎ When an ideal value may be availed by applying analog operation to adjust Kp and Ki values, the ideal value may be solved and directly inputted into Parameters F164 and F165 (or into the second unit setup of Kp/F168 and Ki/F169).

For example: F164 is set for 150% ; and F165, 500%, the analog Kp value is adjusted to 45% ; and Ki, 60%.
Ideal Real Kp Value = 150%×45% = 67.5%.....F164
Ideal Real Ki Value = 500%×60% = 300%.....F165

◎ Both ideal real Kp and Ki values are directly inputted into F164 and F165 while shutting off Kp and Ki adjustment parameters F172 and F173.

F174	AC Drive Comm. Address	1~255		1

◎ The address range of the ac drive communication falls between 1 ~ 255, representing the address of the ac drive in the communication network. The remote controller (PC or PLC) must be given remote control of the communication address set for each ac drive. (Note 1)

Note1: No ac drive shall have the same communication address within the same communication network.

F175	Transmission Rate	0~3		2

0 : 2400 **1 : 4800** **2 : 9600** **3 : 19200**

◎ 2400 Bps transmits 2400/8 = 300 bytes per second.
The type of transmission cable and its length affect the transmission rate. In the case of longer cable being used, the cable with slower transmission rate is preferred to compensate for a higher transmission quality and stability. If faster response speed is expected from the ac drive, adjust for higher transmission rate or adjust (F177) ac drive response time.

Standstill Positioning

Parameter	Description	Range	Unit	Ex-factory Setting
F176	Communication Data Format	0~2		0

0：8,N,1 RTU(1 start bit + 8 data bits + 1 stop bit)

1：8,E,1 RTU(1 start bit + 8 data bits + 1 Even bit + 1 stop bit)

2：8,O,1 RTU(1 start bit + 8 data bits + 1 Odd bit + 1 stop bit)

F177	AC Drive Response Time	3~50	ms	5

◎ The response time of the ac drive is the delay time between the time the ac drive receives command signal from the remote controller and the time the it sends its response signal.The time between the response time of the remote controller from one transmitted package to the next may vary, If the response time of the acdrive is too short and not matching to the response time of the remote controller, the response signal may get overlapped with the command signal in the communication network. Therefore, the response time for the ac drive must be set to that of the remote controller.

F178	Receive Failure Response	0~5		0

◎ To determine if the failure response signal should be sent in case of any error after the inspection operation of the command signal received by the ac drive.

0: Normal Receiving

1: Function Error Code

2: CRCL Error

3: CRCH Error

4: Packet Receiving Time Over 0.2 Seconds

5: Changing Parameter Not Permitted during Operation

F179	Standstill Positioning	0, 1		0

■ **0: Disabled**

■ **1: Activated** – When this functions is activated, the internal control may be applied to lock the rotor of the motor at zero-speed to prevent it from any movement drift. When the speed command setting is 0 and the motor speed reaches zero-speed, the zero-speed positioning control and PI gain are activated to lock the rotor in place. To perform this function, the drive should be in closed loop flux vector control mode (F126 = 5).

Pump Functions

Parameter	Description	Range	Unit	Ex-factory Setting
F180	Positioning P Gain	0~100.00	%	30.00
F181	Positioning I Gain	0~100.00	%	20.00
F182	Constant Water Pumping Function Activated	0~1		0

■ **0: Disabled**

■ **1: Activated** – To activate the constant water pumping PID control, stand-by operation, and protection functions of detecting water pumping at low power without water.

F183	Sleep Detected Time	0~12000	Sec	15
F184	Sleep Error	0.00~10.00	%	5.00
F185	Wake-up Error	0.0~100.0	%	10.0

◎ If after the water pump starts to operate, the feedback value is consistent with the target (command) value and the feedback signal becomes constant instead of a small pulse feedback signal (indicating that the water pressure is stabilized), setting (F188) for sleep error is activated for detection according to the following conditions:

Detection Conditions

(1) When the water pressure error is ＞ (F184) sleep error setting, the water valve will not be shut off and PID constant pressure control operation continues.

(2) When the water pressure is ＜ (F184) sleep error setting, the water valve has been shut off and the (F183) sleep countdown timer is activated. PID control enters into sleep mode once when countdown is completed.

Note: Both settings of (F184) Sleep Error and (F185) Wake-up Error are set as a percentage of the target value; and the Wake-up Error setting must be greater than the Sleep Error setting.

Example: Target Value of Water Pressure=2 kg/cm², Sleep Error=5%(0.1kg/cm²) and Wake-up Error = 10% (0.2 kg/cm²)

◎ When the water pressure is greater than the constant signal at 1.9 kg/cm², the (F183) Sleep Detected Time is activated. The PID control is wakening up to control the operation when the pressure value is smaller than 1.8 kg/cm² upon entering into the sleep mode or already in the sleep mode.

16 Preset Speeds

Parameter	Description	Range	Unit	Ex-factory Setting
F186	Standby Operation Detected Time	0~12000	Sec	900
F187	Standby Operation Time	0~12000	Sec	60
F188	Standby Operation Frequency	0.0~400.0	Hz	0.0

◎ When PID control enters into sleep mode, (F186) Standby Operation Detected Time is activated to detect the countdown timer. Once the counting value reaches 0, (F188) Standby Operation Frequency and (F187) Standby Operation Time are activated to repeat cycling the standby operation mode until upon entering into Wake-up mode.

► When the standby operation mode is not desired, set (F188) Standby Operation Frequency at 0.0 Hz.

F189	Low Power Detected Level	0.0~100.0	%	10.0
F190	Low Power Detected Time	0~12000	Sec	60
F191	Low Power Detected Restoration Time	0~12000	Sec	3000

◎ When the protection mechanism of water pumping at low power without water is activated, the detection of insufficient water pressure or the absence of water on the primary side is executed according to the setting of (F189) Low Power Detected Valve and PID water pressure feedback value. Upon the detected time is out, the ac drive stops operating and enters into (F191) Low Power Detected Restoration Time (test will be activated once again after the expiry of the downtime).

◎ (F189) Low Power Detected Level) is set as a percentage of (F124) HP Rated P (e.g., 1HP = 746W). If after the water pump starts to operate and the real power % is smaller than that of (F189) Low Power Detected Level, the protection mechanism of protection is activated. The output real power percentage may be monitored in Parameter F0=18 Real Power (%).

F192	Stage 8 Speed	0~400.0	Hz	0
F193	Stage 9 Speed	0~400.0	Hz	0
F194	Stage 10 Speed	0~400.0	Hz	0
F195	Stage 11 Speed	0~400.0	Hz	0
F196	Stage 12 Speed	0~400.0	Hz	0
F197	Stage 13 Speed	0~400.0	Hz	0
F198	Stage 14 Speed	0~400.0	Hz	0
F199	Stage 15 Speed	0~400.0	Hz	0

*** Attention: From the 8th speed to the 16th speed, there are no autoprogrammable (like PLC) function, which can only be control by terminal or internal program.**

Storing/Recalling Parameters

Parameter	Description	Range	Unit	Ex-factory Setting
F206	Recall Parameter	0~3		0

- **0: Not Recalled.**
- **1: Recall Ex-factory Setup** －Recall the ex-factory setting (F109.F120~F125 are not affected).
- **2: Recall Parameters Saved in DSP** – Recall the data of parameter group saved in the EEPROM of the DSP.
- **3: Recall Parameter Settings Saved in Digital Operator** – Recall the parameter settings saved in the digital operator.

*** If parameter settings have to be provided for two different manufacturing processes on the same unit of machine, apply F206=2, with one set of saved parameter settings and F206=3 with another set of saved parameter settings and recall them to the RAM as needed.**

F207	Save Current Parameters	0~2	1	0

- **0: Not Saved.**
- **1: Saved to DSP** – Save the modified parameter settings into the EEPROM of the DSP.

*** Attention: Any changing of parameter setting will be saved only in the RAM of DSP which will not reserve the changing after power off. Hence, please have to reset the parameter. 1: save to EEPROM of DSP.**

- **2: Saved to Digital Operator** – to save the modified parameter settings into the digital operator.

*** ATTENTION1– Each digital operator is provided with an EEPROM to maintain records without any externally power supply. The memory capacity for each EEPROM covers to all parameter settings of one unit of ac drive, and may be used to save another set of parameter settings from another ac drive, or acts as the backup for storage and parameter duplication. The duplication of the parameter settings may be done through Parameter F206: (3) Recall Parameter Settings Saved in Digital Operator. The recalled parameter settings from the digital operator is recalled to the RAM of the DSP; and then saved the same to F207=1: You must save to DSP to complete the permanent data storage.**

*** ATTENTION 2– Parameter duplication function is only applicable to duplicate the parameters from multiple ac drives under the conditions they are of the same voltage grade, capacity and same control mode.**

Parameter	Description	Range	Unit	Ex-factory Setting
F208	Lock up EEPROM Parameters	0~3	1	0

- **0: Save Allowed** – to save all parameter settings into the EEPROM.
- **1: Lock up Parameters Stored in DSP** –Any modified parameter setting is not allowed to be stored in DSP's EEPROM.
- **2: Lock up Parameters Stored in Digital Operator** –Any modified parameter setting is not allowed to be stored in the digital operator's EEPROM.
- **3: Lock up Parameters Stored in DSP and Digital Operator** – Any modified parameter setting is not allowed to be stored in both the DSP or the EEPROM of the digital operator.

*** When the EEPROM is restricted from data storage, all the parameter settings are registered in the RAM of the DSP. When Power Off, all the parameter settings in the RAM are immediately lost.**

VI

PROTECTION & TROUBLESHOOTING

Abnormality Diagnosis

◎ This Chapter describes the display of abnormality found with the ac drive and coping measures, as well as the troubleshooting in case of any abnormality found with the motor.

Abnormality Display & Coping Measures

Display	Description	Cause	Coping Measures
Err 1	Over voltage or over current in standby status	• Excessively high voltage at input (R.S.T) source resulting in that the voltage on the DC side is over the voltage detected level. • Possible shortage between phases or shortage to the grounding of the output cable.	• Drop the voltage to fall within the range of power source specification. • Check the output cable and remove any shortage when confirmed.
Err 2	Over voltage or over current in Acceleration	• If the activation is done while the motor is idling (that could easily lead to over voltage or over current) • If acceleration time too short (that easily leads to over current).	• Set F6=2: DC Brake, then leave it to be started by activation frequency. • Allow longer acceleration time.
Err 3	Over voltage or current in deceleration	• If deceleration time too short (that easily leads to over voltage or over current).	• Allow longer deceleration time (set the deceleration time that meets GD^2)
Err 4	Over voltage or current in speed regulation	• if the motor is drawn by external force. • If load undergoes drastic change.	• Improve system to expel external source. • Change the load to be smoother.
Err 5	Heat sink overheated	• If temperature of heat sink of the ac drive is over the F87 setting. • If cooling fans operate normality • If ambient temperature gets too high	• Check F87 setting. • Replace the cooling fan. • Increase air ventilation volume.
Err 6	Dc Bus over voltage	• If input source (R.S.T) voltage higher than DC protection level (F109 seetingx1.414x130%) or F109 setting error. • Short deceleration time, and large regenerated source from motor	• Reduce source voltage. • Check F109 setting. • Extend deceleration time or connect to the brake resistance (or brake unit).
Err 7	Dc Bus low voltage	• Transient power interruption resulting in voltage stages below DC protection level(F109 seeting x1.414x70%) Phase insufficiency in input power or loosening wiring terminal • Wild changes to the input power voltage • Parameter F109 setting error	• Check to identify the cause and improve power source quality.

Abnormality Display & Coping Measures

Display	Description	Cause	Coping Measures
Err 8	Motor overload	• Motor load current is greater than the built-in electronic thermo-sensitive setting (F84, F85) • V/F set F101: maximal output voltage and F102: maximal voltage frequency gets too high or too low • F106 torque compensation setting too high	• Improve the load to motor and check for correct parameters (F84, F85). • Check settings of Parameters (F101, F102) of V/F characteristics. • Check the settings.
Err 9	AC drive voltage not match the motor voltage	• F120 motor rated voltage not be less than 1.2X of the input voltage of the ac drive.	• Change the motor voltage grade and check parameters F109, F120.
Err 10	Over-current detected via software & inspection	• Peak amperage of U.V.W on the output side of the driver greater than 2.8X of the rated amperage. • If acceleration time too short • If impact amperage for operation gets too large	• Check for normal operation of motor & mechanical system • Check the setting of acceleration time parameter • Replace with a driver of larger capacity
Err 11	AC drive rated current range not match motor current	• F121 motor rated current not be less than 9X of the rated current of the ac drive.	• Change motor capacity, and check the setting of parameter F121)(small motor capacity prevents control and protection.)
Err 12	U-phase output side off or C.T failure	• Phase wire of U.V.W on output side of the ac drive and motor wiring not secured or open. • failure to internal current sensor (C.T)	• Check the wiring loops before restoration of power. • Return to the genuine maker for service.
Err 13	V-phase output side off or C.T failure		
Err 14	W-phase output side off or C.T failure		
Err 15	Absence of water in pump, lower power detected	• Check for normal water supply at the inlet of pump. • Check for normal setting in the pump function parameter area. • Check settings of Parameters F189 and F190.	• Correct the water inlet failure and re-start. • Check again the setting of pump function parameter
Err 16	Encoder direction opposite to the phase sequence on the output side	• PG revolution direction is opposite to that of the motor operation	• Switch between PG Phase A and B or change the settings of Parameter F129.
Err 17	Encoder signal abnormality	• PG wiring error or disconnected • PG pulse number (F128) setting error	• Check the PG wiring. • Check the parameter settings.
Err 18	Auto-tuning failure	• Motor electric parameter auto-tuning failure	• Check for correct settings of Parameters F120~F125. • Manually operate motor data and input results into motor electric parameter group (F133~F137). Refer to P5-36.

Abnormality Display & Coping Measures

Display	Description	Cause	Coping Measures
Err 23	Absence of speed feedback preventing performance of closed loop control	• Absence of setting up parameter F127: speed feedback at 1: Encoder 1.	• Set up Parameter F127.
Err 25	EEPROM parameter read back out of range	• Failure in EEPROM, no data available, storage incomplete, or parameter setting out of range.	• Use the function of Parameter F206=1: Recall Ex-factory setting before setting up the motor nameplate parameter group, or check one by one the parameter settings for any challenge of the range. • If the step aforesaid fails, return it to genuine maker for service.
Err 26	Operator storage parameter write-in failure	• Operator extension too long or subject to noise interference. • Operator memory failure.	• Improve wiring quality and length. • Replace the operator & run the test again.
Err 27	DSP storage parameter locked and preventing modification.	• Parameter storage is restricted to prevent from saving new data.	• If required, save the new parameter, and set Parameter F208=0: Save Allowed.
Err 28	Operator storage parameter locked and preventing modification	• The parameter storage of the digital operator has been restricted.	• Select Parameter F208=0: Save Allowed.
Err 29	External input abnormality	• External abnormality signals are inputted from the multi-function input terminal (Di3~Di8).	• Remove the cause of external abnormality.
Err 30 Err 31	Unbalanced three-phase output current. Leakage current abnormality	• Poor wiring or poor motor insulation.	• Check the output (U.V.W)wiring and insulation for damage. • Check if the setting for Parameter F86 is too small.
Err 32	PUF fuse burnt out	• Damaged IGBT module due to shortage or grounding on the output side of the ac drive.	• Check the cause and take coping measures before replacing the ac drive.
Err 33	PF input source phase insufficiency or too low	• Poor conduction of the breaker or EM contact. • Loosening input power wiring terminal • Drastic changes in the input power voltage	• Check the cause and take coping measures before restoring the power.

Abnormality Display & Coping Measures

Display	Description	Cause	Coping Measures
Err 35	Error in automatic operation time setup.	• All the automatic operation for 8 stages of speed are set at 0 (there is no operation time to be executed).	• Check the settings of Parameters F93~F100
Err 36	Digital input terminal setup repeated.	• The same function is given repeated set by the multi-function input terminal Di3~Di8 (with the exception of 0: Disabled).	• Check the settings of Parameters F60~F65

Most Frequently Used Troubleshooting

INHIBIT

Troubleshooting listed below can only be done by qualified technician or dedicated keeper of this machine. The manufacturer of this machine will not be liable for any failure of this machine due to failure to observe this statement.

✕ The motor just won't run

Symptom : the motor fails to operate

✓ **Check to see if the source has been delivered to the R.S.T source terminals?**

☞Turn on the power source

☞Kill the power source and turn it on.

✓ **Check to see if there is the voltage output from output terminals U.V.W?**

☞Confirm the power source.

☞Follow the operation procedure to operate

✓ **Check to see if the motor shaft is deadlocked?**

☞Ease off the load to the motor.

☞Replace the motor.

☞Check the mechanical construction.

✓ **If the setting of the frequency command gets too small?**

☞Change the command setting to be greater than the F16 activation frequency command of the minimum output frequency.

✓ **If there is any error in the wiring?**

☞Check and repair for any error in wiring loops

✓ **If the protection mechanism works?**

☞Confirm what is displayed on the monitor.

✓ **If the operation keypad properly set up?**

☞Reconfirm the operation procedure

✕ The ac drive trips when the motor is activated?

Symptom: the message of Err2 displays when the motor is activated or in course of acceleration (possible a transient output exceeds 200% of the rated current when the over current protection function operates, or the IGBT module is damaged).

✓ **If the torque is insufficient upon activation of heavy load?**

☞Change the setting of torque compensation.

✓ **If the acceleration time is too short to match the GD^2 of the load?**

☞Extend the acceleration time.

✓ **If the activation frequency is too low?**

☞Increase the activation frequency.

✓ **If the protection mechanism works?**

☞Confirm what is displayed on the monitor.

✓ **The ac drive is activated while the motor is idling?**

☞To set the function of reactivation in the course of idling.

✓ **If the operation keyboard properly set up? Any leakage due to poor insulation of the motor?**

☞Reconfirm

☞Replace with a good motor, or remove the output wires before feeding to activate; if trip insists Err2, it indicates failure of the ac drive; if not, the failure of the motor.

✕ The ac drive trips when the motor is decelerating?

Symptom: Err 6 displays in the course of deceleration (over voltage protection function operates).

✓ **When the GD2 of the load driven by the motor gets too large, the auxiliary brake loop built in the ac drive fails to effectively absorb the rejuvenated energy from the motor in acute deceleration?**

*** Once the rejuvenated energy is greater than 400V(Series 200~240V) or 800V (Series 380~460V), the over voltage protection immediately functions.**

☞Extend the deceleration time.

☞Install a DC brake resistance (optional) of a grade not greater than 10HP exclusively for external use.

☞If the DC brake resistance is of a grade of 15HP or larger, an external brake unit and resistance must be provided.

✕ Tripping off during the static operation?

◆ **Err 7 displays during operation.**

✓ **Insufficient voltage of power source?**

☞Review the capacity of the power source, and check cause(s) leading to insufficient voltage, e.g., if the contact of the no-fuse of the EM switch operates in normal condition.

◆ **Err 6 displays during operation.**

✓ **Load and motor or source voltage is to blame?**

✓ **If any poor motor insulation leading to leakage?**

☞Install a DC brake resistance (optional) exclusively for external use.

☞Remove the output wire before feeding the electricity and activating; if Err6 displays, it indicates that the ac drive fails; if Err 6 display disappears, it indicates leakage from the motor, replace the motor.

VII

TEST, INSPECTION & MAINTENANCE

TEST, INSPECTION & MAINTENANCE

CAUTION

While providing maintenance and inspection:

- Confirm the current status of the power switch. For safety concerns, do not permit anyone else approaching the power switch where should be marked as such.
- Care shall be taken that DC high voltage still accumulates in the large capacity electrolytic capacitor on the rectification loop in the ac drive even in a short while after the power is off. Therefore, always check and make sure that the indicator of [CHARGE] if off before conducting the inspection of the substrates.

Highlights of Periodical Maintenance:

• External terminals, components, and screws:

Is there any loosening screw and connector? → If yes, install or tighten up

• Cooling Fans:

Is there any abnormal sound or vibration? → If yes, replace or clean up.

• Capacitor and parts:

Is there any discoloration, carbonization or odor? → If yes, return to the factory to replace the capacitor or the component of the ac drive.

• Heat sink fins, Circuit board:

Any dust built up or attached with Conductive chips, oil stain? → If yes, use air gun to clear with dry air. (Never use any cleanser at own discretion.)

Daily Inspection Items

- If motor operates as preset? Any abnormal sound or vibration during operation?
- If the cooling fans installed below the ac drive operates normally? Andy sign of abnormal temperature rise?
- Check the output current detected by the monitor to see if it falls out of the normal range?
- If the ambient temperature maintains normal? If the installation environment is normal?

*** Check the items listed in the manual one by one to ensure that this product always maintains normal operation status for extended service life.**

CAUTION

Whereas The ac drive is comprised of many types of components, it depends on those parts and components for the ac drive to maintain and provide its expected functions. However, electronic parts usually are consumption items depending on the work environment and the use patter of the individual operator. To maintain long-term normal operation, it is recommended to conductor periodical inspection and replacement as required.

VIII

Selecting Brake Resistance & Brake Unit

Selecting the Brake Resistance Capacity

WARNING

The temperature surrounding of the brake resistance will rise after the continuous discharging by brake resistance to expose the objects in the vicinity. Therefore, always keep those objects at least 2M away from the brake resistance. Sufficient ventilation or additional fans shall be provided at where the brake resistance is installed.

AC DRIVE							SPECIFICATION
Voltage	Model	Capacity	Ohm (min.)	Wattage (min.)	Quantity	Brake Torque	Externally Provided Unit Specification
200V	LS800	0.75	150	120	1	130	Built-in brake circuit
		1.50	100	200	1	130	
		2.20	60	250	1	120	
		3.70	40	300	1	120	
		5.50	25	1000	1	150	
		7.50	20	2000	1	150	
		11.00	13.6	2400	1	125	LSBR-2015B
		15.00	10.0	3000	1	125	LSBR-2015B
		18.50	8.0	4800	1	125	LSBR-2022B
		22.00	6.8	4800	1	125	LSBR-2022B
		30.00	10	3000	2	125	LSBR-2015B
		37.00	10	3000	2	100	LSBR-2015B
		45.00	6.8	4800	2	120	LSBR-2022B
		55.00	6.8	4800	2	100	LSBR-2022B
400V	LS800	0.75	300	200	1	200	Built-in brake circuit
		1.50	300	200	1	200	
		2.20	150	300	1	130	
		3.70	100	500	1	130	
		5.50	80	800	1	150	
		7.50	60	1000	1	150	
		11.00	50	1040	1	135	LSBR-4015B
		15.00	40	1560	1	125	LSBR-4015B
		18.50	32	4800	1	125	LSBR-4030B
		22.00	27.2	4800	1	125	LSBR-4030B
		30.00	20	6000	1	125	LSBR-4030B
		37.00	32	4800	2	125	LSBR-4030B
		45.00	20	6000	2	135	LSBR-4030B
		55.00	20	6000	2	135	LSBR-4030B

IX APPENDIX

IX APPENDIX A – PARAMETER SETUP SCHEDULE–

1	Parameter Code	Description	Range	Unit	Ex-factory Setting	R/W	Page No.
OPERATION STATUS DISPLAY SETUP	F 0	Operator display variables selections	0~36	1	1		P5-1
		0: Speed Command 1: Output Motor Speed 2: Encoder Speed 1 3: Encoder Speed 2 4: Sensorless vector Speed 5: Output Frequency 6: Output process Speed 7: Slipping Frequency 8: Vdc (V) 9: Output Voltage (rms) 10: Excitation Voltage 11: Torque Voltage 12: Output Current (rms) 13: Excitation Current Comm. 14: Torque Current Comm. 15: Excitation Current 16: Torque Current 17: Output Power(%) 18: Output True Power (%) 19: Output Reactive Power(%) 20: Temperature (℃) 21: Counts 22: Digital Input Status 23: Digital Output Status 24: Digital Operator AV(%) 25: AV1 (%) 26: AV 2(%) 27: AI (mA) % 28: Vdc_0 29: Cycles & Multi-Stage Number 30: Reserved 31: Phase U Current (rms) 32: Phase V Current (rms) 33: Phase W Current (rms) 34: PID (%) 35~1023: Reserved 36: LS800 Version					
	F 1	Speed display unit	0~1	1	0		P5-2
		0: Frequency (Hz) 1: Speed.					
	F 2	Display multiplying factor for process speed display (maximal display value without unit at 3276.7)	0.001~ 10.000	0.001	1.000		P5-2
	F 3	Operator display update constant	0~15	1	2		
OPERATION CONTROL PARAMETER	F 4	Operation control source	0~1	1	0		
		0: PB Operator 1: Digital Input Terminal					
	F 5	Speed Command	0~8	1	2		P5-3
		0 : PB Operator 1 : Digital Input Terminal 2 : (Operator) AV input (5) V 3 : VA1 Input (±10V) 4 : AV2 Input (+10V) 5 : AI Input (20mA) 6 : AV2+AI 7 : Encoder 2; 8 : External PID					
	F 6	Activation Method	0~2	1	0		P5-5
		0 : Started by Activation Frequency; 1 : Follower Activation; 2 : DC Brake before Starting by Activation Frequency					
	F 7	Stop Mode	0~2	1	1		P5-5
		0 : Coas to Stop 1: Dynamic Stop 2 : DC Brake					
	F 8	Brake Time before Activation	0~30.0	0.1Sec	5.0		P5-6
	F 9	Voltage of Brake before Activation	0~20.0	0.001Pu	.050		
	F10	Stop Brake Time	0~30.0	0.1Sec	5.0		
	F11	Stop Brake Voltage	0~.200	0.001Pu	.050		
	F12	Stop Brake Starting Frequency	0~20.0	0.1Hz	0		
SPEED LIMIT	F13	Revolving Direction Limit	0~3	1	1		P5-7
		0 : Either FWD or REV. 1: FWD only 2 : REV only 3 : REV only with negative bias					
	F14	Lower Limit Frequency(F14 ≤ F15)	0~400.0	0.1Hz	0		P5-7
	F15	Upper Limit Frequency(F15 ≥ F14)	0~400.0	0.1Hz	60.0		
	F16	Activation Frequency	0~30.0	0.1Hz	1		P5-8

MULTI-STAGE SPEED COMMAND SETUP	Preset Speeds Terminal →	Inching Command	Multi-stage Command 3	Multi-stage Command 2	Multi-stage Command 1					
F17	Master	OFF	OFF	OFF	OFF	0~400.0	0.1Hz	60.0		P5-9
F18	Stage1	OFF	OFF	OFF	ON	0~400.0	0.1Hz	5.0		
F19	Stage2	OFF	OFF	ON	OFF	0~400.0	0.1Hz	10.0		
F20	Stage3	OFF	OFF	ON	ON	0~400.0	0.1Hz	15.0		
F21	Stage4	OFF	ON	OFF	OFF	0~400.0	0.1Hz	20.0		
F22	Stage5	OFF	ON	OFF	ON	0~400.0	0.1Hz	30.0		
F23	Stage6	OFF	ON	ON	OFF	0~400.0	0.1Hz	40.0		
F24	Stage7	OFF	ON	ON	ON	0~400.0	0.1Hz	50.0		
F25	Inching	ON	X	X	X	0~400.0	0.1Hz	5.0		
	(* F14≦setting ≦F15)									

2	Parameter Code	Description			Range	Unit	Ex-factory Setting	R/W	Page No.
ACCELERATION/DECELERATION TIME		F40-0: Internal Time Allotment	Multi-stage Speed						
	F26	Acceleration time 1	Mater/ 8 speed	Stage 4/ 12 speed	.1~1200.0	0.1Sec	10.0		P5-9
	F27	Deceleration time 1			.1~1200.0	0.1Sec	10.0		
	F28	Acceleration time 2	Stage 1/ 9 speed	Stage 5/ 13 speed	.1~1200.0	0.1Sec	10.0		
	F29	Deceleration time 2			.1~1200.0	0.1Sec	10.0		
	F30	Acceleration time 3	Stage 2/ 10 speed	Stage 6/ 14 speed	.1~1200.0	0.1Sec	10.0		
	F31	Deceleration time 3			.1~1200.0	0.1Sec	10.0		
	F32	Acceleration time 4	Stage 3/ 11 speed	Stage7/ 15 speed	.1~1200.0	0.1Sec	10.0		
	F33	Deceleration time 4			.1~1200.0	0.1Sec	10.0		
	F34	Inching Acceleration Time			.1~1200.0	0.1Sec	5.0		
	F35	Inching Deceleration Time			.1~1200.0	0.1Sec	5.0		
	F36	Acceleration curvature			0~100	1 %	0		P5-10
	F37	Acceleration curves intersection point			0~100	1 %	50		
	F38	Deceleration curvature			0~100	1 %	0		
	F39	Deceleration curves intersection point			0~100	1 %	50		
	F40	Multi-stage acceleration/deceleration time allotment			0~2	1	0		P5-11
		0 : All Internal Allotment 1: Half Internal Allotment and another Half External Terminals; 2 : External Terminals							
ANALOG FREQUENCY COMMAND	F41	Operator Analog AV:0V bias Ratio			-300.0~300.0	%	0.0		P5-12
	F42	Operator Analog AV:5V Gain Ratio			-300.0~300.0	%	100.0		
	F43	Analog Voltage AV1:-10V Gain Ratio			-300.0~300.0	%	-100.0		P5-13
	F44	Analog Voltage AV1:10V Gain Ratio			-300.0~300.0	%	100.0		
	F45	Analog Voltage AV1 Sensorless Voltage			0~50.0	%	0.0		
	F46	Analog Voltage AV1 Zero-point Output Gain			0~50.0	%	0.0		
	F47	Analog Voltage AV Maximum Output Limit			10.0~100.0	%	100.0		
	F48	Analog Voltage AV2:0 Bias Ratio			-300.0~300.0	%	0.0		P5-15
	F49	Analog Voltage AV2:10V Gain Ratio			-300.0~300.0	%	100.0		
	F50	Analog Voltage AV2 Sensorless Voltage			0.0~50.0	%	0.0		
	F51	Analog Voltage AV2 Zero-point Output Gain			0.0~50.0	%	0.0		
	F52	Analog Voltage AV2 Maximum Output Limit			10.0~100.0	%	100.0		
	F53	AI: 0mA (or 0V) Bias Ratio			-300.0~300.0	%	0.0		
	F54	AI: 20mA (or 0V) Gain Ratio			-300.0~300.0	%	100.0		
	F55	AI Sensorless Voltage			0.0~50.0	%	0.0		
	F56	AI Zero-point Output Gain			0.0~50.0	%	0.0		
	F57	Analog Current AI, Maximum Output Limit			10.0~100.0	%	100.0		

IX APPENDIX A – PARAMETER SETUP SCHEDULE–

3	Parameter Code	Description		Range	Unit	Ex-factory Setting	R/W	Page No.
MULTI-FUNCTION INPUT TERMINALS	F58	Digital Terminal Scan Cycle		1~5000	1=0.2ms	10x0.2ms=2ms		P5-17
	F59	DI1, DI 2 Setup		0~1		0		P5-18
	0：DI1(FWD/STOP), DI2(REV/STOP) 1：DI1(RUN/STOP), DI2(FWD/REV)							
	F60	DI3 Setup	Settings for multi-function input terminals should never be repeated with the exception of the setting of 0: Disabled.	0~21	1	2		P5-18
	F61	DI4 Setup		0~21	1	4		
	F62	DI5 Setup		0~21	1	5		
	F63	DI6 Setup		0~21	1	6		
	F64	DI7 Setup		0~21	1	9		
	F65	DI8 Setup		0~21	1	18		
	0: Disabled 1: 3-way Control 2: Input in Case of External Abnormality (NO) 3: Input in Case of External Abnormality (NC) 4: RESET 5: Multi-stage speed command 1; 6: Multi-stage speed command 2; 7: Multi-stage speed command 3; 8: Multi-stage speed command 4; 9: Inching Operation 10: Acceleration/Deceleration Time Command 1; 11: Acceleration/Deceleration Time Command 2; 12: Master Speed Increase 13: Master Speed Decrease 14: Automatic Operation 15: Auto Operation Suspended 16: Counter Signal Input 17: Counter Zero-in 18: Free-run 19: Save Energy Operation 20: Second Unit PID 21: Enabling PID							
MULTI-FUNCTION OUTPUT TERMINALS	F66	Relay1 Setup		0~11	1	1		P5-21
	F67	DO1 Setup		0~11	1	11		
	F68	DO2 Setup		0~11	1	6		
	F69	DO3 Setup		0~11	1	7		
	F70	Relay2 Setup		0~11	1	3		
	0: Disabled 1: Output in Case of Abnormality (NO) 2: Output in Case of Abnormality (NC) 3: In Operation 4: Frequency Attained 1 5: Frequency Attained 2 6: Consistent Frequency 7: Overload Warning 8: OL Timing Forecast 9: Counter Cycle is Up 10: Comparator Counting is Up 11: Zero-Speed Detected							
	F71	Frequency Consistent Width		0~10.0	0.1Hz	1.0		P5-22
	F72	Frequency Attained 1		0~400.0	0.1Hz	60.0		
	F73	Frequency Attained 2		0~400.0	0.1Hz	60.0		
	F74	Magnetic Stagnation Width Attained		0~10.0	0.1Hz	1.0		
	F75	Counting Cycle		0~30000	1P	1000		P5-23
	F76	Comparative Counting		0~30000	1P	500		
FREQUENCY SKIP	F77	Frequency Skip 1		0~400.0	0.1Hz	0.0		
	F78	Frequency Skip 2		0~400.0	0.1Hz	0.0		
	F79	Frequency Skip 3		0~400.0	0.1Hz	0.0		
	F80	Frequency Skip Width		0~10.0	0.1Hz	0.0		
PROTECTION SETUP	F81	Stall Prevention		0~1	1	0		P5-24
	0: Not Activated 1: Activation							
	F82	Stalling voltage Setup		1.00~1.25	0.01	1.10		P5-24
	F83	Stalling Current Setup		0.50~2.50	0.01Pu	1.50		
	F84	Overload Current Lever		1.00~2.50	0.01Pu	1.50		P5-25
	F85	Overload time Allowance		0.1~120.0	0.1Sec	60.0		
	F86	Leakage current outputted or unbalanced 3-phase output current		0.001~0.500	0.001Pu	0.100		
	F87	Over Temp Protection Setup		60.00~95.00	0.01℃	85.00		
	F88	Fans Activating Temp. Setup		30.00~45.00	0.01℃	40.00		

- PARAMETER SETUP SCHEDULE- APPENDIX A IX

4	Parameter Code	Description	Range	Unit	Ex-factory Setting	R/W	Page No.
PROTECTION SETUP	F89	Automatic Voltage Regulation (AVR)	0~1	1	0		P5-25
		0: Disabled 1: Activation					
	F90	Dynamic Braking Activated	0~1	1	0		P5-26
		0: Disabled 1: Activation					
AUTOMATIC OPERATION FUNCTION	F91	Automatic Operation	0~1	1	0		P5-26
		0: Disabled 1: Reciprocal Fashion 2: Cyclic Fashion 3: Mater Speed after Reciprocation 4: Mater Speed after Circulating					
	F92	Number of Cycles (1.To execute revolution clockwise and the operation time, set up the seconds in positive value. 2.To execute revolution counter-clockwise and the operation time, set up the seconds in negative value. 3.To execute revolution direction control, refer to F13.)	1~2000	1	1		P5-27
	F93	Stage 1 Time & Direction	-30000~30000	1Sec	10		
	F94	Stage 2 Time & Direction	-30000~30000	1Sec	10		
	F95	Stage 3 Time & Direction	-30000~30000	1Sec	10		
	F96	Stage 4 Time& Direction	-30000~30000	1Sec	10		
	F97	Stage 5 Time & Direction	-30000~30000	1Sec	10		
	F98	Stage 6 Time & Direction	-30000~30000	1Sec	10		
	F99	Stage 7 Time& Direction	-30000~30000	1Sec	10		
	F100	Stage 8 Time & Direction	-30000~30000	1Sec	10		
MAGNETIC FLUX SETUP	F101	Maximum Output Voltage (U.V. W)	.50~1.00	0.01Pu	0.90		
	F102	V/F Maximal Voltage Frequency	.50~2.00	0.01Pu	1.00		P5-28
	F103	V/F Curve Option	-10~5	1	0		
	F104	Save Energy Control Mode	0~2	1	0		P5-29
		0 : Normal Mode 1: Save Energy Control Mode 2: External Terminal Control					
	F105	V/F Torque Compensation Mode	0~2	1	1		P5-29
		0 : Disabled 1: Setup Compensation Activated 2 : Automatic torque compensation					
	F106	V/F Torque Compensation Setting	0~.200	0.001PU	0.020		P5-29
AC DRIVE PARAMETER	F107	PWM Modulation Method	1~2	1	1		P5-30
		1 : 3-Phase SVPWM Modulation 2 : 2-Phase SVPWM Modulation					
	F108	PWM Switching Frequency	2000~16000	1Hz	5000		P5-30
	F109	RST Input Voltage (rms)	180~500VAC	1VAC	220，380，440		P5-31
		(* F109 setting must satisfy: F109≦1.2×F120)					
METER 1 WAVEFORM OUTPUT	F110	METER 1 Output format	0~1	1	0		P5-31
		0: PWM Modulation Output 1: Pulse Frequency Output					
	F111	Pulse Frequency Multiplying Factor 1	1~36	1	1		P5-31
	F112	PWM1 Output Mode Options	0~17	1	1		
		0: Output ineffective 5: Source Frequency 10: Output Current 15: True Power 1: Motor Speed 6: Slip Frequency 11: Excitation Current Command 16: Reactive Power 2: Feedback Speed 1 7: Output Voltage 12: Torque Current Command 17: PID % value Output 3: Feedback Speed 2 8: Excitation Voltage 13: Excitation Current 4: Estimated Speed 9: Torque Voltage 14: Torque Current					
	F113	PWM1 Display Variable Multiplying Factor/10V	.50~8.00	0.01Pu	1.00		P5-32
	F114	PWM1 Display Variable Polarity Setup	0~1	1	0		
		0: Without Polarity 1:With Polarity→ (*PWM1 Output Voltage Signal < 5Vdc, motor engages in REV operation) (*PWM1 Output Voltage Signal = 5Vdc, motor stops) (*PWM1 Output Voltage Signal > 5Vdc, motor engages in FWD operation)					

IX APPENDIX A - PARAMETER SETUP SCHEDULE-

5	Parameter Code	Description	Rang	Unit	Ex-factory Setting	R/W	Page No.
METER 2	F115	METER 2 Output Format	0~1	1	0		P5-32
	0: PWM Modulation Output 1: Pulse Frequency Output						
	F116	Pulse Frequency Multiplying Factor 2	0~36	1	1		P5-32
	F117	PWM2 Output Mode Options	0~17	1	10		
	* Mode selection same as that for F112						
	F118	PWM2 Display Variable Multiplying Factor/10V	.50~8.00	0.01Pu	1.00		P5-32
	F119	PWM2 display Variable Polarity Setup	0~1		0		
	0: No Polarity 1: With Polarity (same as that of Parameter F114)						
MOTOR NAMEPLATE	F120	Rated Voltage (rms)	180~500	1V	N		P5-32
	F121	Rated Current (rms)	1.5~130.0	0.1A	N		
	(* F121 setting must satisfy: F121 > AC Drive Rated current ÷ 9)						
	F122	Rated Frequency	50.0~70.0	0.1Hz	N		P5-32
	F123	Rated Speed	0~4200	1rpm	N		P5-33
	F124	HP	.5~50.0	0.1Hp	N		
	F125	Number of Poles	2~12	2 Pole	N		
	Note: N= Ex-factory setting varies depending on the drive and motor capacity						
CONTROL MODE	F126	Control Mode Setup	0~6	1	2		P5-33
	0: Electric Parameter Detection; 1: Mechanical Parameter Detection 2: Open Loop V/F vector Control; 3: Closed Loop V/F vector Control 4: Sensorless V/F vector Controll 5: Closed Loop Flux Vector Control 6: Sensorless Flux Vector Control						
ENCODER SETUP	F127	Speed Feedback	0~1	1	0		P5-34
	0: No Feedback 1: Encoder 1						
	F128	Encoder 1 Pitch No./Revolution	600~2500	1P/rev	1024		P5-34
	F129	Encoder 1 Direction	-1~1	1	1		
	-1: B leads A 0: Single Phase Feedback 1: A leads B						
	F130	Encoder 2 Pitch No./Revolution	600~2500	1P/rev	1024		P5-34
	F131	Encoder 2 Direction	-1~1	1	1		
	-1: B Leads A 0: Single Phase Feedback 1: A Leads B						
	F132	Encoder 2 Multiplying Factor	0.01~7.50	0.01X	1.00		P5-34
MOTOR ELECTRIC PARAMTER	F133	Stator Resistance	6500~32767	1	20000		P5-36
	F134	Rotor Resistance	6500~32767	1	16000		
	F135	Stator Self-Induction	6500~32767	1	18000		
	F136	Mutual Induction	6500~32767	1	17500		
	F137	Rated Rotor Resistance	-32767~32767	1	16000		
	F138	Mechanical Constant	0~30000	1	1500		P5-37
Estimator	F139	Magnetic Flux Estimator Bandwidth	4.0~10.0	0.1Hz	4.0		
	F140	Speed Estimator Bandwidth	1.0~6.0	0.1Hz	4.0		
	F141	Slip Correction Gain	10~200	1%	88		

6	Parameter Code	Description	Rang	Unit	Ex-factory Setting	R/W	Page No.
SPEED PI CONTROL PARAMETER	F142	V/F vector Speed Control P Gain	0~100	1%	30		P5-37
	F143	V/F vector Speed Control I Gain	0~100.0	0.1%	20.0		
	F144	Flux Vector Speed Control P Gain	0~100	1%	40		
	F145	Flux Vector Speed Control I Gain	0~100.0	0.1%	20.0		
	F146	Sensorless Speed Control P Gain	0~100	1%	30		
	F147	Sensorless Speed Control I Gain	0~100.0	0.1%	15.0		
	F148	Torque Current Limit	0~1.250	0.001	1.000		P5-39
		Minimum {5×F121, F148×AC Drive Rated current}					
	F149	Torque Current Analog Limit	0~5	1	0		P5-39
		0: Disabled 1: Digital Operator AV 2: AV1 3: AV2 4: AI 5: PID Control					
ABNORMLAITY RECORDS	F150	Latest Abnormality Record	0~256	1	0		P5-39
	F151	Last Abnormality Record	0~256	1	0		
	F152	Last 2 Abnormality Records	0~256	1	0		
	F153	Last 3 Abnormality Records	0~256	1	0		
	F154	Last 4 Abnormality Records	0~256	1	0		
	F155	Last 5 Abnormality Records	0~256	1	0		
		Err 0 : Digital operator communication failure Err 1 : Over voltage or current in standby status Err 2 : Over voltage or current in acceleration Err 3 : Over voltage or current in deceleration Err 4 : Over voltage or current in speed regulation Err 5 : Heat sink overheated Err 6 : Dc Bus over voltage Err 7 : Dc Bus low voltage Err 8 : Overload Err 9 : AC Drive voltage not match the motor voltage Err 10 : Software detection overload current protection Err 11 : AC Drive rated current range not match motor current Err 12 : U-phase output side off or C.T failure Err 13 : V-phase output side off or C.T failure Err 14 : W-phase output side off or C.T failure Err 15 : Pump low current detected Err 16 : Encoder direction opposite to the phase sequence on the output side Err 17 : Encoder signal abnormality Err 18 : Auto-tuning failure Err 19 : Reserved Err 20 : Reserved Err 21 : Reserved Err 22 : Reserved Err 23 : Failure to perform closed loop control due to no speed feedback Err 24 : Reserved Err 25 : EEPROM parameter read back out of range Err 26 : Digital operator storage parameter write in failure Err 27 : DSP storage parameter locked & preventing modification. Err 28 : Operator storage parameter locked & preventing modification Err 29 : External input abnormality Err 30 : Unbalanced 3-phase output current Err 31 : Leakage current outputted Err 32 : PUF fuse burnt out Err 33 : PF input source phase insufficiency or too low Err 34 : Reserved Err 35 : Error in automatic operation time setup. Err 36 : Digital input terminal setup repeated. Err 37~256 : Reserved					
	F156	Abnormality Records Cleared	0~1	1	0		P5-39
		0: Not Cleared. 1: Cleared.					

IX APPENDIX A －PARAMETER SETUP SCHEDULE－

7	Parameter Code	Description	Rang	Unit	Ex-factory Setting	R/W	Page No.
EXTNERAL PID CONTROL	F157	PID Mode	0~4		0		P5-41
	0: PID Disabled 1: PID Stop Setting Zero-in	2: PID Stop Setting Reserved 3: DI enabled (PID Stop Setting Zero-in)	4: DI enabled (PID Stop Setting Reserved)				
	F158	PI Target Value Input Options	0~8		0		P5-41
	0: PI zero point setup 1: AV1 input 2: AV2 input	3: AI input 4: Encoder 2 feedback value 5: Encoder 1 feedback value	6: RAMP output 7: Total output current 8: Torque current				
	F159	PI Feedback Input Options	0~8		0		P5-41
	0: PI zero point setup 1: AV1 input 2: AV2 input	3: AI input 4: Encoder 2 feedback value 5: Encoder 1 feedback value	6: RAMP output 7: Total output current 8: Torque current				
	F160	D Feedback Input Options	0~8		0		P5-42
	0: PI error 1: AV1 input 2: AV2 input	3: AI input; 4: Encoder 2 feedback value; 5: Encoder 1 feedback value;	6: RAMP output; 7: Total output current; 8: Torque current				
	F161	PI Zero-point Setup	0.00~100.00	%	50.00		P5-42
	F162	D Input Filtration Time Setup	0.05~10.00	Sec	0.20		P5-43
	F163	PID Output Limit	0.00~100.00	%	100.00		
	F164	Unit 1 Kp Gain	0.00~300.00	%	100.00		
	F165	Unit 1 Ki_H Gain	0.0~3000.00	%	400.0		
	F166	Unit 1 Ki_L Gain	0.0~3000.00	%	200.0		
	F167	Unit 1 Kd Gain	0.0~3000.00	%	20.0		
	F168	Unit 2 Kp Gain	0.00~300.00	%	100.00		
	F169	Unit 2Ki_H Gain	0.0~3000.00	%	5.0		
	F170	Unit 2Ki_L Gain	0.0~3000.00	%	5.0		
	F171	Unit 2Kd Gain	0.0~3000.00	%	5.0		
	F172	Kp Analog Adjustment	0~4		0		P5-45
	F173	Ki Analog Adjustment	0~4		0		
	0: No adjustment to be made	1: Operator AV Input	2: AV1 Input	3: AV2 Input	4: AI Input		
PC COMMUNICATION	F174	Drive Com. Address	1~255		1		P5-46
	F175	PC Transmission Rate	0~3		0		
	0 ： 2400	1 ： 4800	2 ： 9600	3 ： 19200			
	F176	PC Comme Data Format	0~2		0		P5-47
	0：8,N,1 RTU (1start bit + 8 data bits + 1 stop bit) 1：8,E,1 RTU (1start bit + 8 data bits + 1 Even bit + 1 stop bit) 2：8,O,1 RTU (1start bit + 8 data bits + 1 Odd bit + 1 stop bit)						
	F177	Drive Response Time	3~50	ms	5		P5-47
	F178	Receive Failure Response	0~1		0		
	0: Normal Receiving 1: Function Error Code	2: CRCL Error 3: CRCH Error	4: Packet Receiving Time Over 0.2 Seconds 5: Changing Parameter Not Permitted during Operation				
STANDSTILL POSITIONING	F179	Stand still position	0~1		0		P5-47
	0: Disabled	1:Activated					
	F180	Positioning P Gain	0~100.00	%	30.00		P5-48
	F181	Positioning I Gain	0~100.00	%	20.00		

-PARAMETER SETUP SCHEDULE- APPENDIX A IX

8	Parameter Code	Description	Rang	Unit	Ex-factory Setting	R/W	Page No.
WATER PUMP FUNCTIONS	F182	Constant Water Pumping Function Activated	0~1		0		P5-48
	0: Disabled 1: Activated						
	F183	Sleep Detected Time	0~12000	Sec	15		P5-48
	F184	Sleep Error	0.0~10.0	%	5.0		
	F185	Wake-up Error	0.0~100.0	%	10.0		
	F186	Standby Operation Detected Time	0~12000	Sec	900		
	F187	Standby Operation Time	0~12000	Sec	60		
	F188	Standby Operation Frequency	0.0~400.0	Hz	0.0		
	F189	Low Current Detected Level	0.0~100.0	%	10		
	F190	Low Current Detected Time	0~12000	Sec	60		
	F191	Low Power Detected Restoration Time	0~12000	Sec	3000		
16 PRESET SPEEDS	F192	Stage 8 Speed	0~400.0	Hz	0		P5-49
	F193	Stage 9 Speed	0~400.0	Hz	0		
	F194	Stage 10 Speed	0~400.0	Hz	0		
	F195	Stage 11 Speed	0~400.0	Hz	0		
	F196	Stage 12 Speed	0~400.0	Hz	0		
	F197	Stage 13 Speed	0~400.0	Hz	0		
	F198	Stage 14 Speed	0~400.0	Hz	0		
	F199	Stage 15 Speed	0~400.0	Hz	0		
STORAGE, RECALL PARAMETERS	F206	Recall Parameter	0~3	Hz	0		P5-50
	0: Not Recalled. 1: Recall Ex-factory Setup 2: Recall Parameters Saved in DSP 3: Recall Parameter Settings Saved in Digital Operator						
	F207	Save Current Parameters	0~2		0		P5-50
	0: Not Saved 1: Saved to DSP 2: Saved in Digital operate keypad						
	F208	Lock up EEPROM Parameters	0~3		0		P5-51
	0: Save Allowed; 1: Lock up Parameters Stored in DSP 2: Lock up Parameters Stored in Digital Operator; 3: Lock up Parameters Stored in DSP and Digital Operator						
	F209	Ex-factor Decryption Code Input 1	-32767~32767		0		
	F210	Ex-factor Decryption Code Input 2	-32767~32767		0		

IX APPENDIX B – ERR DISPLAY –

Err Code	Description of Alarm Report
Err0	Digital operator communication failure
Err 1	Over voltage or current in standby status
Err 2	Over voltage or current during acceleration
Err 3	Over voltage or current during deceleration
Err 4	Over voltage or current during speed regulation
Err 5	Heat sink overheated
Err 6	Dc Bus over voltage
Err 7	Dc Bus low voltage
Err 8	Motor Overload
Err 9	AC Drive voltage not matched to the motor voltage
Err 10	Software detected overload current protection
Err 11	AC Drive rated current range not matched to motor current
Err 12	Loss of output U-phase or U-phase C.T failure
Err 13	Loss of output V-phase or V-phase C.T failure
Err 14	Loss of output W-phase or W-phase C.T failure
Err 15	Pump low current detected
Err 16	Encoder direction opposite to the phase sequence on the output side
Err 17	Encoder signal abnormality
Err 18	Parameter detection failure
Err 23	Absence of speed feedback affecting performance of closed loop control
Err 25	EEPROM parameter read back out of range
Err 26	Digital operator storage parameter write failure
Err 27	DSP storage parameter locked and preventing modification.
Err 28	Operator storage parameter locked and preventing modification
Err 29	External input abnormality
Err 30	unbalanced three-phase output current.
Err 31	Leakage current outputted
Err 32	PUF fuse burnt out
Err 33	Power failure or too low mains input phase voltage
Err 35	Error in automatic operation time setup.
Err 36	Digital input terminal setup repeated.
Err 19，Err 20，Err 21，Err 22，Err 24，Err 34 Are signals reserved for failure.	

Dimension of Enclosure

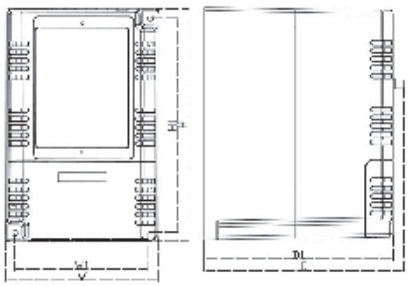

(Fig. A)

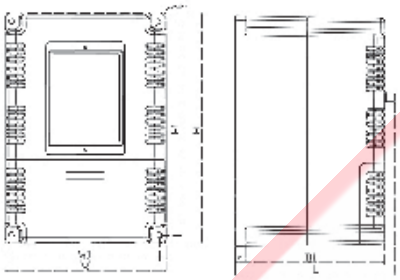

(Fig. B)

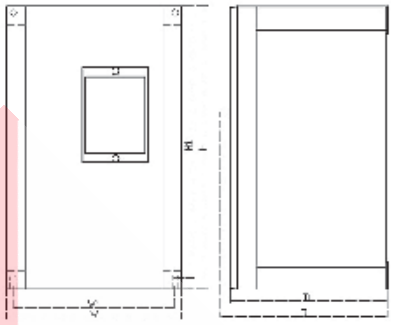

(Fig. C)

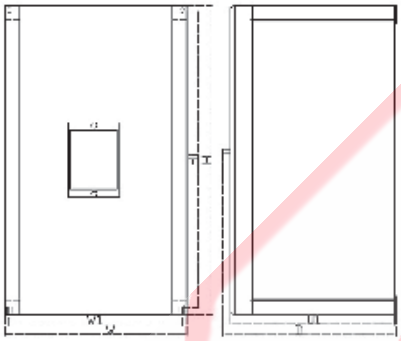

(Fig. D)

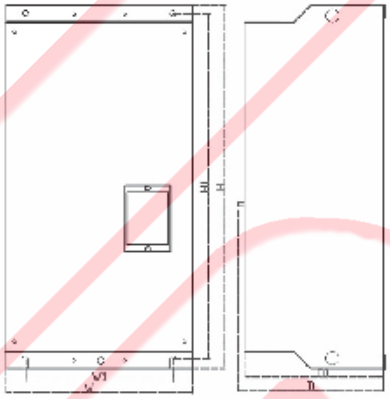

(Fig. E)

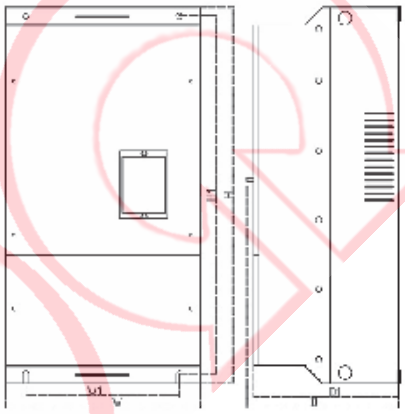

(Fig. F)

Voltage Grade	Maximum Applicable Motor Capacity (KW)	Dimension/Unit: (mm)						
		W	W1	H	H1	D	D1	Appearance
220V / 400V	0.4	114.2	101	172.1	159	146	136	A
	0.75							
	1.5							
	2.2	A / B (2 Types of Casing Specification)						
	3.7	152	137.5	214	200	146.4	136.4	B
	5.5	188	170	300	282	180	170	C
	7.5							
	11							
	15，18.5，22	250	226	420	405	226	216	D
	30~37	290	236	562	535	220	210	E
	45~75	356	236	670	645	285	275	F

*** Mechanism dimension given in this page is only for reference purpose, and the manufacturer may make any change without further notice. Please refer to the dimension given on the updated catalogue for the corresponding product.**

Dimension of Keypad (Handset for Communication)

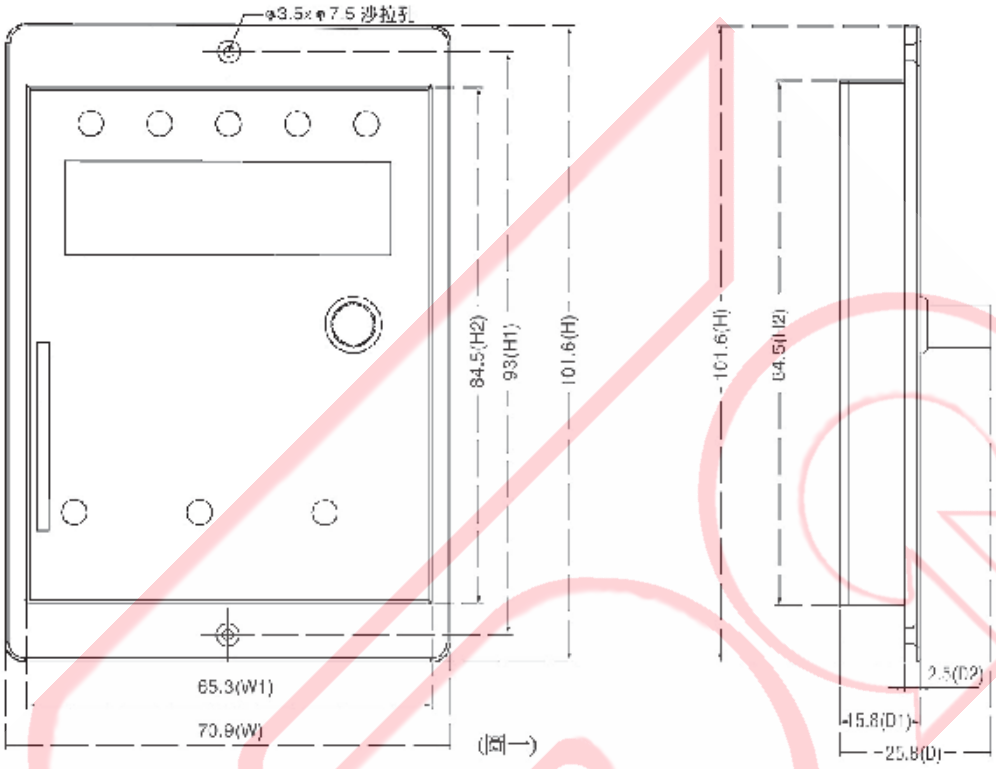

(Front View)

Version 1.0,March 01,2006

800 Model

AC DRIVE

Application Manual

Sensorless & Closed Loop

Version No. 2.20

SUITABLE MODEL : THREE PHASE 200V~240V/380V~460V CLASS

The edition changes the NO.2.20 version explanation

The edition changes the NO.2.20 version explanation

In order to make the function more convenient customer use also to increase many new functions, thus the change edition was the NO.2.20 version changes the project as follows：

Introduction of function keys ：

NO.2.20 version

Classification	Pushbutton	Summary description of function
Control/ parameter key	FUN	Depress to enter into Parameter Function Mode.
	DATA ENTER	**To read and write parameter settings.**
		With to the material confirms reads in, and automatic storage to DSP (internal EEPROM).
Shift/ increase, decrease keys	➢	To move the position of flashing cursor rightward to select the place for data entry.
		＊When revolution, right lateral key for circulation demonstration. →F：Hypothesis frequency→H：Reference frequency n：Encoder speed1←E：Output voltage←A：Output current
	▲	Depress to make an increment of numerical values for parametric encoding and setting values, etc.
		Under operation control mode with F5: rpm command source=0, proceed the frequency setup from digital operation panel.
	▼	Depress to make an decrement of numerical values for parametric encoding and setting values, etc.
		In the revolution may enter F0, surveillance of each kind of demonstration project.
Operation Command keys	FWD	To execute an operation command in forward revolution and illuminate the LED indicator.
		To serve as a function key to execute stop running command when execution of forward revolution is disabled due to limitation of rotational direction.
	REV	To execute an operation command in reversal revolution and illuminate the LED indicator.
		To serve as a function key to execute stop running command when execution of reversal revolution is disabled due to limitation of rotational direction.
	STOP RESET	To execute the STOP running command.
		To reset the failure when encountered a failure; depress of this key in parameter setup mode will restore the original setting values.
RPM command		F5：RPM control for operation panel Ai (V.R.) when RPM command source =1.

Parameter setup mode

NO.2.20 version

Flow process of parameter setup mode

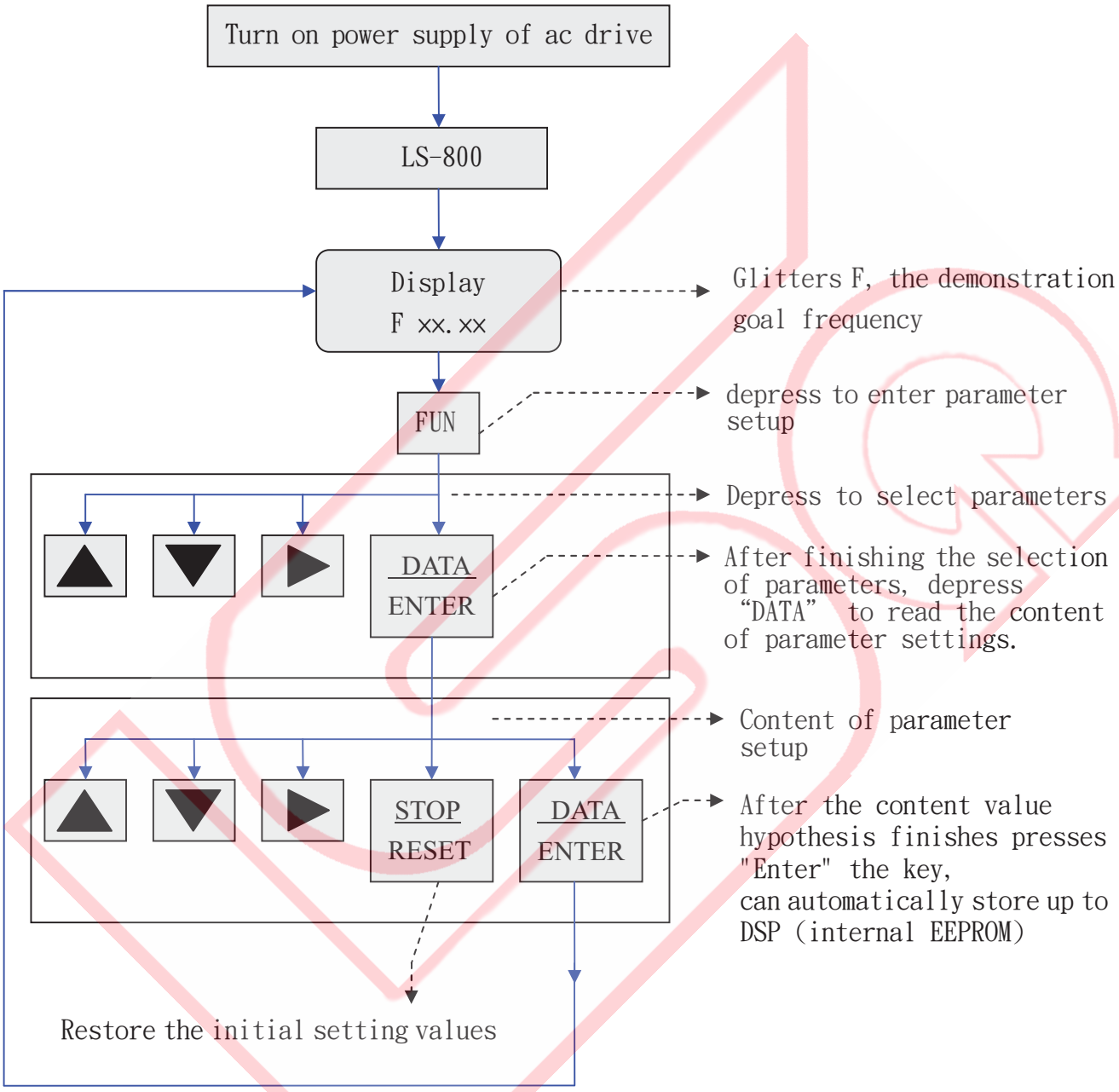

- Note 1：Make sure to save each and all parameter setting that have been confirmed and complied with the purpose as demanded in the commissioning into the built-in EEPROM by selecting F207(save current parameter)=1：Save to DSP(built-in EEPROM) to prevent loss of the parameter setting.
- Note 2：F207(save current parameter)=0：Not Save；1：Save to DSP；and 2：Save to Digital Operator.

Control mode

NO. 2. 20 version

Flowchart of control mode for digital operation panel

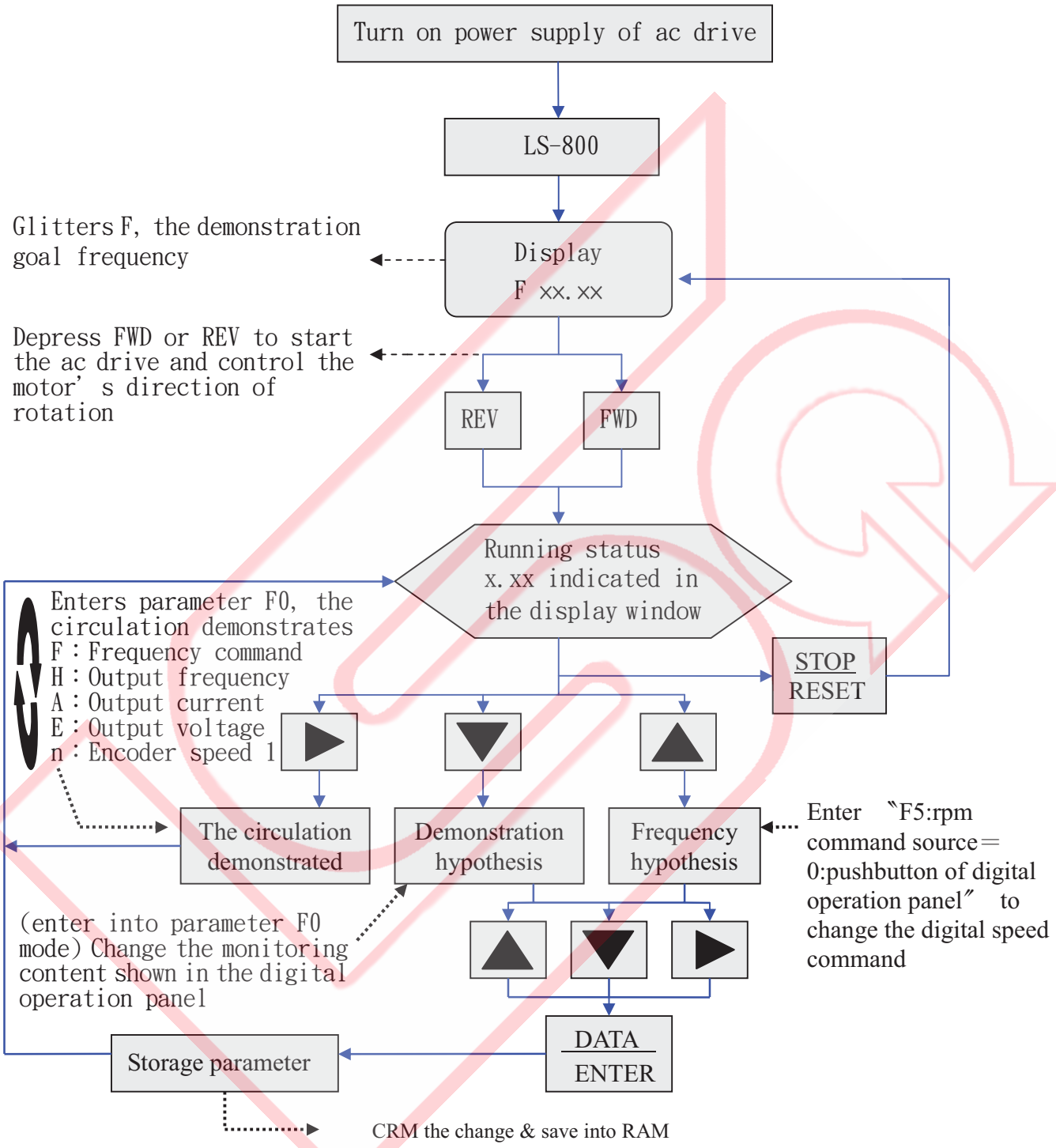

Quick & cyclic display functions during operation

Each press of ➢ key from digital operation panel is able to cyclically display the function in the following order：Frequency command→Output frequency→Output current→Output voltage→Encoder speed 1.

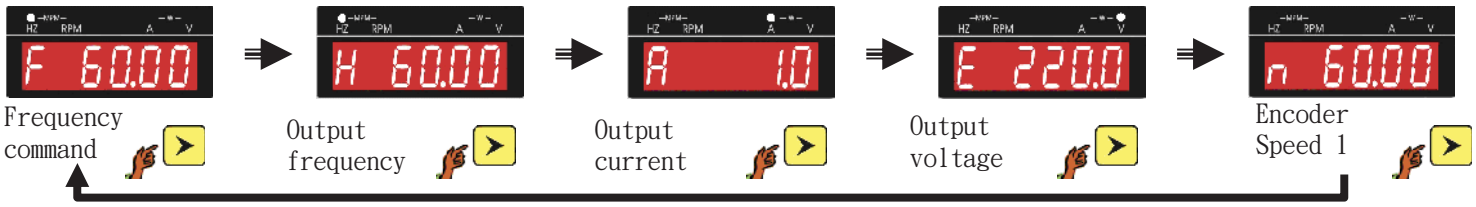

NO.2.20 version

Fast Operation Control Mode

Parameter Function	Operation Procedure	Ex-factory Setting	Page No.
F4：Operation Control Source			
0：PB Operator	Press [FWD] once F ×××× displays ↓ Enter into Forward Operation Mode	0	P5-2
	* During commissioning, watch for the revolving direction of the motor. *		
1：Digital Input Terminal	Terminal Di1 /ON → FWD (indicator ON) operation → OFF/Stop		P5-2 P5-16
F5：RPM Command Source			
0：Digital operation pane	Frequency changing mode is accessing the ▲ key during the operating state	2	P5-3
1：Operator AV Input (5V)	To perform RPM control from the potentiometer (V.R.) on the operator.		P5-3
2：AV 1Input (±10V)	To perform RPM control by entering 0 ~ ± 10V from analog AV1 terminal.		P5-3
3：AV2 Input (±10V)	To perform RPM control by entering 0 ~ ± 10V from analog AV2 terminal.		P5-3
4：AI Input (20mA)	To perform RPM control by entering 0 ~ 20mA from analog AV1 terminal.		P5-3
5：AV2+AI	With analog AV2 and AI terminals, addition and subtraction operation can be provided for both analog signals at the same time to perform revolving speed control.		P5-3
6：Encoder 2	Additional PG-AB2 speed control card must be installed to connect to terminals A1 and B1 with digital pulse signals to perform revolving speed control.		P5-4
7：PID	To execute the external analog signals for PID feedback control.		P5-4

Automatic Modulation

Automatic Modulation Elements

- If F126=4: Sensorless Scalar Control, 5: Closed Loop Vector Control, or 6: Sensorless Vector Control is selected for the control mode; automatic modulation must be performed before operation.
- When F126=6 Sensorless Vector Control is applied, select the motor with a rated voltage 20V (40V in case of 400 Grade) higher than the input source voltage of the frequency converter where speed precision is a must within the high speed range (approximate 90% or greater of the rated RPM). If the rated voltage of the motor is equal to that of the input source of the frequency converter, then proper and correct motor characteristics may not be available if the output voltage of the frequency converter is less than sufficient. (Refer to Prompt 1.)
- Before performing the function of parameter automatic modulation, the specification capacity on the nameplate of motor must be set to Parameter F120: Rated Voltage, F121: Rated Amperage, F122: Rated Frequency, F123: Rated RPM, F124: HP, and F125: Number of Polarity of Motor.
- Select F4 (Operation Control Source) = 0: PB Operator Operation before performing the automatic modulation.

CAUTION

Upon performing the automatic modulation, **the motor must be separated from the machine**, and confirm that there is no exposure to danger even the motor is running.

Parameter Automatic Modulation

◆ **Parametric tuning (F126) -1: Detection of static electric parameters: This function is designed for those machinery equipments coupled with heavy duty that fails the detection of dynamic parameters; however, it shall be used in association with the setup of parameter F97 (motor's no-load current %) so that the motor's electric parameter group (F133~F137) can be detected in full while the accuracy in this regard is lower than the 0: Electric parameter detection.**

1、 Set up the control mode (F126) at 0: Electric Parameter Detection to perform the parameter automatic modulation.

2、 Press [ENTER] for the inverter to display Pr-RL to start outputting DC to the motor for providing Stage 1 static mode parameter modulation in advance, and Stage 2 dynamic parameter modulation for the revolution type of the motor.

3、 If the automatic modulation has been successfully executed, the inverter will automatically set up the electric characteristics of the motor and save them into corresponding parameters F133~F137.

4、 If F126=5 (Closed Loop Vector Control) Mode is required, perform the F126=1 (Machinery Parameter Detection) automatic modulation. The setting of the parameter modulation will affect the response of the vector speed (PI) control. During the automatic modulation, the inverter displays Pr-Jm; the dynamic parameter modulation of the revolution type of the motor will be performed, and the modulation setting will be saved into Parameter F138. (Refer to Prompt 2.)

5、 Modify the control mode (F126) to 4: Sensorless Scalar Control, 5: Closed Loop Vector Control, or 6: Sensorless Vector Control.

6、 Save electric parameters into F207=1: Save to DSP (EEPROM) to avoid losing the electric parameters after power off.

Note: If automatic modulation continues to fail, adjust for higher rated amperage of the motor at an increment of 10% until the automatic modulation is successfully done. In case of further failure, replace with an electric machine provided with better characteristics, or input by manual electric parameters to F133~F137.

NO.2.20 version

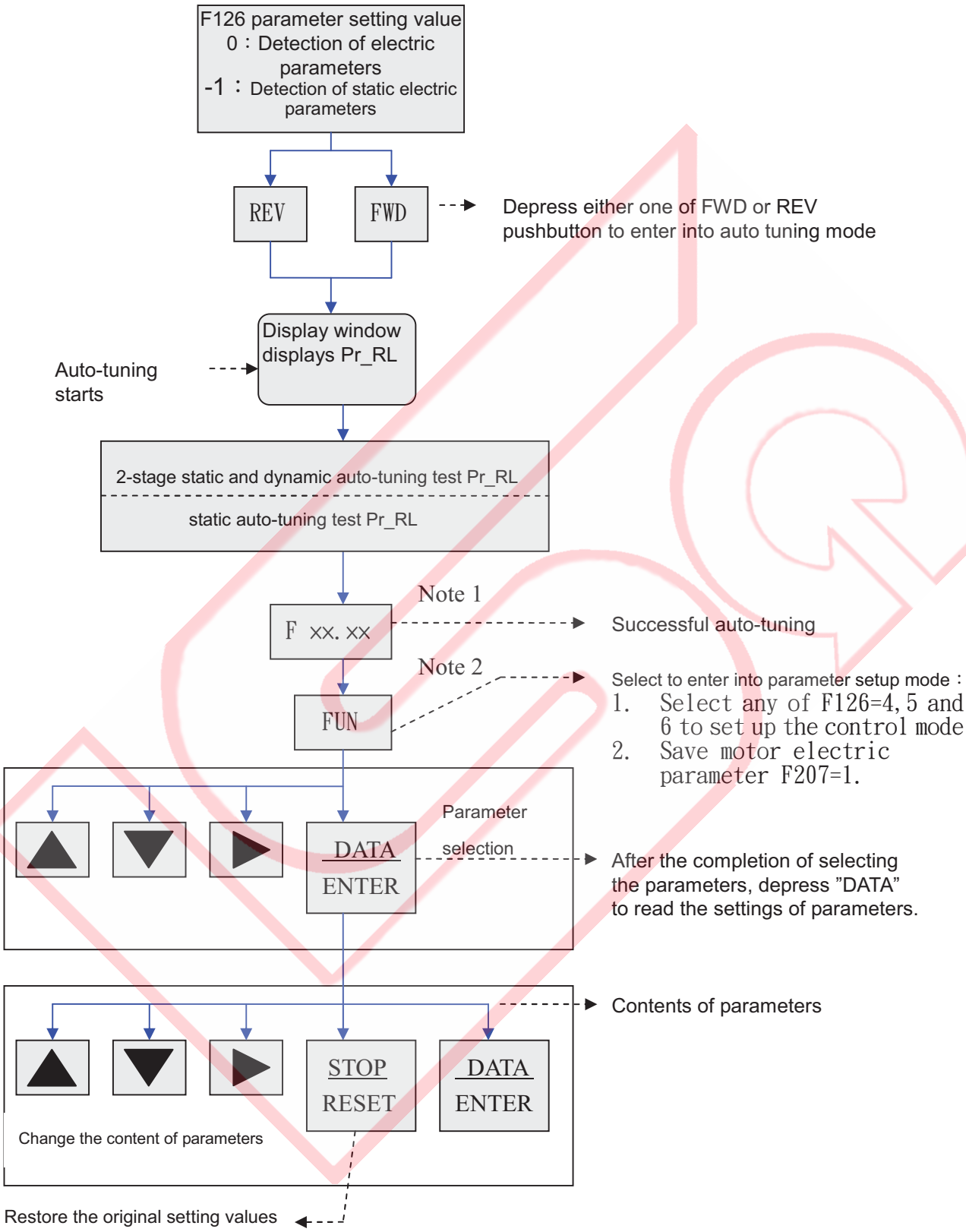

Note 1：Detection of electric parameters is completed.
Note 2： Set up the relevant operation control mode from F126

Operation Status Monitor Setup

R： Parameter changeable during operation (○)

R	Parameter code	Descriptions	Setting range	Unit	Ex-factory set value
○	F0	Operator display variables selections	0～40	1	1

Seven-stage display and LED indicators on the operator may be applied to monitor a total of 40 operation status settings of the drive.

Setting	Function	Description of Function	Related Parameter
0	RPM Command (F)	RPM command setting	F5
1	Reference RPM (H)	Monitor output rpm reference value.	
2	Output Current (A)	Display the total drive motor load amperage from output of drive (U.V.W)	
3	Output Voltage (E)	Display the output (U.V.W) voltage (rms) of the drive.	
4	Feedback RPM 1	Display the real rpm of the motor feedback to Encoder.	F128
5	Feedback RPM 2	Display the product of Encoder 2 feedback rpm and F132 multiplying power.	F130、F132
6	Estimated RPM	Monitor estimated sensorless vector control rpm.	F126=6
7	Output source Frequency	Monitor the output frequency after compensation.	F126=3.4.5.6
8	Without Unit	Display linear speed, feeding speed…etc. (with maximal display value at 3276.7).	F2.F123
9	Slip Frequency	Monitor the slip F due to load when the motor is on load	F126=3.4.5.6
10	Vdc (V)	Display DC voltage on the capacitor	
11	Excitation Voltage	The excitation voltage in vector control mode	
12	Toque Voltage	The torque voltage in vector control mode	
13	Excitation Current Command	The command value of excitation current in vector control mode	
14	Torque Current Command	The command value of torque current in vector control mode	
15	Excitation Current	Real excitation amperage	
16	Torque Current	Real torque amperage	
17	Output Power	Total output power P=IV	
18	True Power	Total apparent power P=VI cos ϕ	
19	Reactive Power	Reactive power P=VI sin ϕ	
20	Temperature	Display the temperature reading of the internal heat sink	F87
21	Counts	Already provided with a built-in summary counter to display counts.	F75
22	Digital Input Status	To monitor digital input and outer terminals control for real-time display of ON or OFF status (for status monitor, refer to P3-5).	F59～F65
23	Digital Output Status		F66～F70
24	Digital Operator AV (V)	• Monitor the analog input voltage % as displayed • Monitor noise voltage generated by the wiring; the voltage may be used to set up the bias voltage for avoiding unnecessary noise interference.	F5=1
25	AV1 (V)		F5=2
26	AV2 (V)		F5=3
27	AI (mA)		F5=4

Setting	Function	Description of Function	Related Parameter
28	Vdc_0	With POWER ON, the initial Vdc of the DC bus on capacitor	
29	Cycles & Multiple Stages	Related to the cycles of automatic operation. and the number of stage of operation currently executed	F92～F100
30	K_Vdc	Reserved	30
31	Phase U current (rms)	Display drive motor load amperage of Phase U output of the drive	31
32	Phase V current (rms)	Display drive motor load amperage of Phase V output of the drive	32
33	Phase W current (rms)	Display drive motor load amperage of Phase W output of the drive	33
34	PID (%)	Display PID control output in %	34
35	Reserved	Reserved	
36	Software version	To display the version number of software	
37	Position tracking error		

R： Parameter changeable during operation (○)

R	Parameter code	Descriptions	Setting range	Unit	Ex-factory set value
○	F5	Frequency command source	0～8		1

※ **This parameter relates to the speed command source of the ac drive.**
The following eight options of rpm command source are available for selection, dpending on the demands of the configuration of the control system.

※ **Once the inching speed function setup becomes effective, its control priority is over the following eight rpm command sources while permitting adaptation of any type of rpm command source for alternative control.**

- **0：PB Operator** — Control is set up by keys [Increase] and [Decrease] from the PB Operator, or by functions 11: Master Speed Increase, and 12: Master Speed Decrease Control of the multi-function digital input terminals.
- **1：(Operator) AV input (5V)** —Control by potentiometer (V.R) signals CD0~5V from the operator.
- **2：AV1 Input (±10V))** — Control by analog voltage signal DC0~±10V inputted from analog input terminal AV1.。
- **3：AV2 Input (+10V)** —Control by analog voltage signal DC0~+10V inputted from analog input terminal AV2.
- **4：AI Input (20mA)** — Control by analog current signal DC0~20mA (or DC0~+10V to be adjusted with SW1~5) inputted from analog input terminal AV1.
- **5：AV2+AI** — Control by addition operation of two input values of analog voltage and analog current (or voltage) signals inputted form both analog input terminals AV2 and AI; or addition and subtraction operation control is done by an ideal negative bias set up by the parameter while performing synchronous linking analog compensation control for multiple units.

※ **For example：(1) ParameterF15=60HZ(upper limit)，AV2 of F49=100%，F48=0V(with a bias of 0%).**

※ **(2) AI of F54=50%，F53= -50%(with a bias of 50%). See Fig. 2 for the curve.**

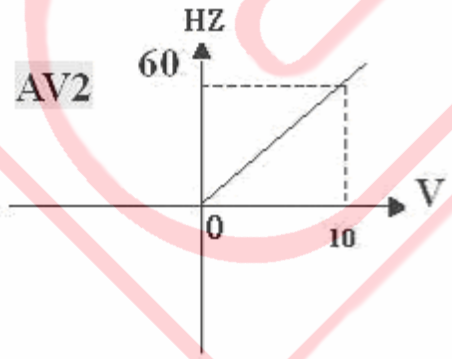

Fig 1

Performing Calculation of Addition and Subtraction (Note1)

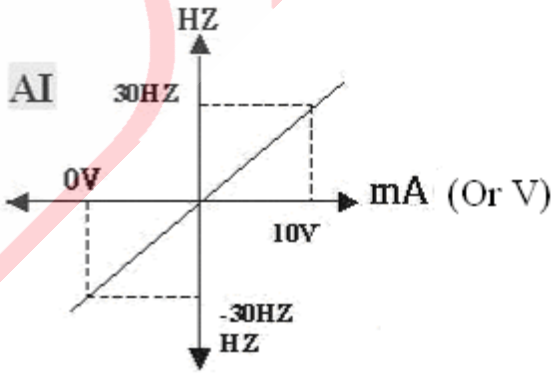

Fig 2

Note 1：Figs. 1 and 2 are schematic view showing the executed addition and subtraction calculation signals.

※ **Fig. 3: AV2 of INV2 is the source of the master speed to exercise addition/subtraction operation on AI signals. Wherein, AI is the auxiliary compensation input. The sum of both values is not be greater than the upper limit of F15 frequency and the difference between both is less than 0HZ, the downtime status exists. Refer to the setup method illustrated in Figs. 1 and 2 for the setting of the parameter.**

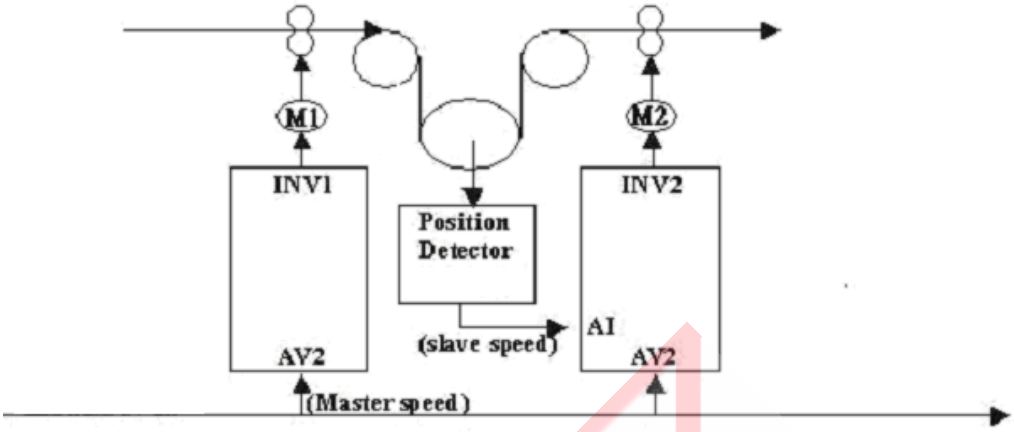

(Fig 3)

6：Encoder 2 —Relates to the control interface for the rpm command source of the digital pulse signal. An additional encoder speed feedback card must be installed to provide follow-up operation control with the primary motor controller (synchronous operation control by ratio).

(Refer to encoder setup parameter group F127~F132 for related application.)

7：External PID —To perform external analog signals PID feedback control. [Select parameter setup PID target value and PID feedback value source terminals, and PID parameter group F157~F171.]

R	Parameter code	Descriptions	Setting range	Unit	Ex-factory set value
×	F8	Braking duration before start	0.0～120.0	Second	5.0

◆This parameter is to set up time duration of DC dynamic braking enabled when ac drive is started, ac drive will start its running only after the entered time duration elapsed. An entry of minimum value “0” to the duration will disable the braking function.

×	F9	Braking current before start	0.00～100.00	%	30.0

◆ This parameter is to set the percentage of the DC brake voltage output before the operation of the ac drive. A minimum set value, i.e., "0", will deny the output brake energy, and will be regarded as a control to trigger a delay for the start of operation. F6 setting shall govern the time span of delay.

×	F10	Stopping & brake voltage time	0.0～120.0	Second	0.0
×	F11	Stopping &brake voltage	0.00～100.00	%	30.0

※Do not enter a minimum value “0” to set up the stopping & brake time and the stopping & brake voltage; an entry of “0” will leave the time and brake energy inactive.

				Range	Unit	Ex-factory Setting
×	F66	Relay1 Setup	@No specific sequence is specified Setup for the function of these six terminals. Upon selecting the function, read first the description and related requirements of the function.	0	1	1
×	F67	DO1 Setup		⁞		11
×	F68	DO2 Setup				6
×	F69	DO3 Setup				7
×	F70	Relay2 Setup		12		3

12：Timer Output function — When the frequency changer starts revolves, after F204 time delay time, corresponds the multi-ability out-port (Timer function output) contacts can close, this function essential matches F6 the direct-current brake function, the direct-current brake energy size may depend on the demand to establish.

R： Parameter changeable during operation (○)

Protection Setup1

R	Parameter code	Descriptions	Setting range	Unit	Ex-factory set value
×	F81	Stall protection setup	0～7		7

bit0：Protection function F82 — To enable the function for stalling voltage protection during deceleration.

bit1：Protection function F83 — To enable the function for stalling current protection during acceleration.

bit2：Protection function F84 — To enable the function electronic thermal relay.

※Digital increment table

Set values	F84 $2^2 = 4$	F83 $2^1 = 2$	F82 $2^0 = 1$	Set values	F84 $2^2 = 4$	F83 $2^1 = 2$	F82 $2^0 = 1$
0	×	×	×	4	○	×	×
1	×	×	○	5	○	×	○
2	×	○	×	6	○	○	×
3	×	○	○	7	○	○	○

※ ○：protection function enabled，×：protection function disabled, no protection function when set value is 0.

×	F82	Setup for stalling voltage during deceleration	1.00～1.25		1.10

◆As a result from the inertia of motor load when the ac drive is executing the deceleration; the motor will regenerate energy into the interior of ac drive to heighten the voltage at DC bus. Therefore, the ac drive will stop decelerating (output frequency paused from decreasing) once a voltage at DC bus detected higher than the set value and resume its executing the deceleration provided that the voltage at DC bus falls below the set value.

※Note: Stall voltage level = F109 (220V) x 1.414 x 1.10 (ex-factory value)

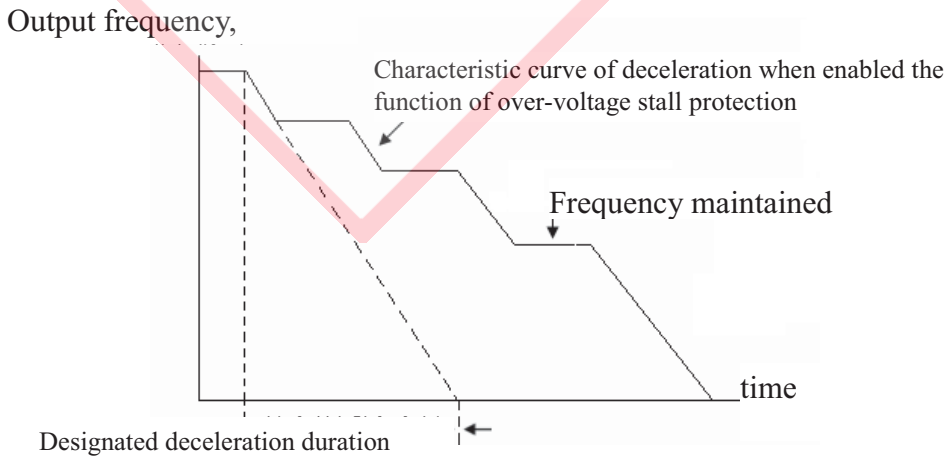

NO.2.20 version R： Parameter changeable during operation (○)

R	Parameter code	Descriptions	Setting range	Unit	Ex-factory set value
×	F83	Setup for stalling current during acceleration	0.50～2.50	Pu	1.50

When performing the acceleration or operation, the ac drive will stop accelerating (output frequency is paused from increasing) due to a too-fast acceleration or too-big motor load that leads to a quick rise of output current from ac drive to exceed the set value of stalling current level; ac drive will resume its acceleration provided that the current is lower than the set value.

◆ stalling current level during acceleration= (F121) motor rated current ×(F83) stalling current percentage

Example： stalling current level = 4A × 1.70 = 6.8A

F83 setup for stalling current during acceleration

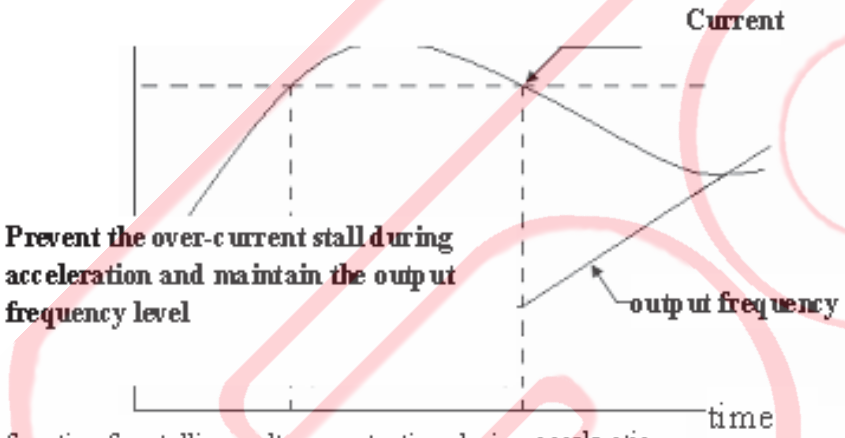

function for stalling voltage protection during acceleration

×	F84	Current level of electronic thermal relay	1.00～2.50	PU	1.50
×	F85	Acting duration of electronic thermal relay	0.1～120.0	Second	60.0

◆ When the rated capacity of ac drive is higher than motor's rated capacity, please input the motor's rated capacity into the parameters F120~F125 to avoid burning out the motor.

◆ This parameter provides a function of electronic thermal relay to protect the motor from overheating. This kind of protective characteristic has taken the protection against the low cooling ability encountered when motor is running at low speed into consideration.

◆ When the continuously loading current output from the ac drive exceeds the set value of (F121)motor rated current , the timer for acting duration of electronic thermal relay will be actuated.

※ $\int (I^2_{A(pu)}-1)dt \geq (I^*_{OL}{}^2-1)\times T_{OL}$, **overload is overtime.**

R： Parameter changeable during operation (○)

R	Parameter code	Descriptions	Setting range	Unit	Ex-factory set value
○	F105	Oscillation-inhibit gain	0.0～100.0	%	15.0

◆ **When operating in some frequency bandwidth, the electric machine will produce current oscillation; then adjustment of this parametric set value can effectively correct this condition. The current oscillating bandwidth for a motor with higher horsepower will appear at a lower frequency bandwidth; therefore, it is advised to duly increase the set value. However, an excessive setting may easily produce an over-excited current, please make a suitable adjustment.**

○	F106	V/F torque Compensation Setting	0.000～0.100	Pu	0.020

V/F linear curve theories are borrowed to provide means for proper promotion of the 0Hz corresponding output voltage so to improve insufficient torque of the motor as demonstrated in the lower rpm area.

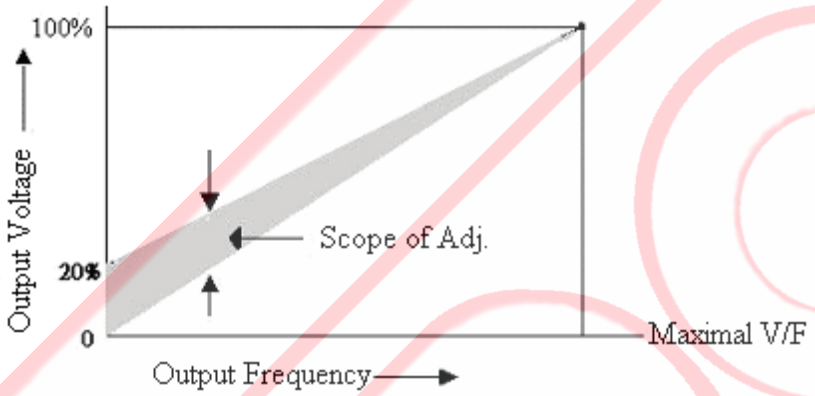

Excessive promotion will render the motor overload current, and further leading to the activation of functions (F82~F85) of limiting output current. Therefore, while confirming the status of output current displayed under F0=12, make the adjustment at the same for the optimal setting.

Unless otherwise specified, 3Hz sis sufficient to activate the motor to run in the V/F control mode.

×	F126	Control mode setup	-1～6		1

-1: Static electric parameter detection – This function is to be used for some machinery equipment that has been coupled with a heavy-duty yet cannot be performed the dynamic parameter detection; however, the F137 value (motor's no-load current %) must be accurately set; thus the motor's electric parameter group (F133~F136) can be fully detected with an accuracy lower than the 0: Electric parameter detection.

0：electric parameter detection – This function is to be enabled to perform the automatic tuning function for static and dynamic parameters that can measure the electric characteristics of motor automatically and enter the motor's parameters into the electric parameter group F133 ~ F137.

(Dynamic parameter tuning: When motor is performed a FWD revolution command to run at a frequency above 40HZ for one minute approximately, the inspection & testing of parameters at no-load or at a current below the motor's rated current for the coupled machine can be performed.)

※Note: Display Pr_RL(Detecting function)

R： Parameter changeable during operation (○)

R	Parameter code	Descriptions	Setting range	Unit	Ex-factory set value
×	F139	Magnetic Flux Estimator Bandwidth	1.0～20.0	HZ	3.0

◆ The setting value hour, the low speed torque is big, the rate error is quite small, the speed easy to produce not stably.
When the setting value is big, the low speed torque is small, the rate error is quite big, the speed is quite stable.

×	F140	Speed Estimator Bandwidth	1.0～20.0	HZ	6.0

◆ The setting value hour, the velocity response is slow, when stable state is steady.
When the setting value is big, the velocity response is quick, when stable state is not steady.

×	F150	Torque Control Mode	0～1	Pu	0

▣ Torque current limit.

▣ Torque current order.

×	F182	The torque control overspeed jumps machine the frequency	0.0～400.0	Hz	60.0
×	F183	PG broken line examination time	0.01～10.00	秒	3.00

◆ May establish the F182 torque control overspeed to jump machine the upper-frequency limit, when the torque control surpasses this upper limit, the frequency changer can jump Err 24.

◆ The PG broken line examination time can (F183), whether examine the Encoder wiring broken line perhaps not meet.

×	F201	Low-speed offset gain	100.0～180.0	%	140.0
×	F202	Torque offset cut-off frequency	0.00～0.60	Pu	0.20

◆ **F201 and F202 are functions in sensorless flux vector control mode and suitable for the equipments with low rpm and high torque.**

◆ **Torque offset is to take motor's no-load current as the base point while offset cut-off frequency is to take motor's rated frequency as the base point.**

Note: The no-load current is the detected value for detecting motor's electric parameters.

Ex：**motor's no-load current** = 3.0A、**motor's rated frequency** = 60Hz；F201 = 140%、F202 = 0.20

calculation formula：3.0 × 140% = 4.2A，

60Hz × 0.20 = 12Hz

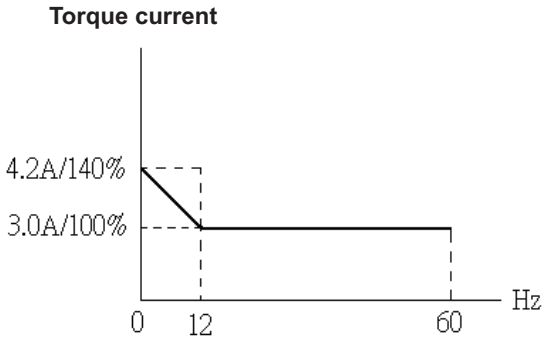

NO.2.20 version

R： Parameter changeable during operation (○)

R	Parameter code	Descriptions	Setting range	Unit	Ex-factory set value
×	F203	The encoder 1 gives the velocity filtering time	1.0～20.0	HZ	3.0

◆ The motor and the Encoder pulse wave will produce some miscellaneous news, may use this function filtration.

○	F204	ON-Delay Time delay	0.00～60.00	Second	0.00
○	F205	OFF-Delay Time delay	0.00～60.00	Second	0.00

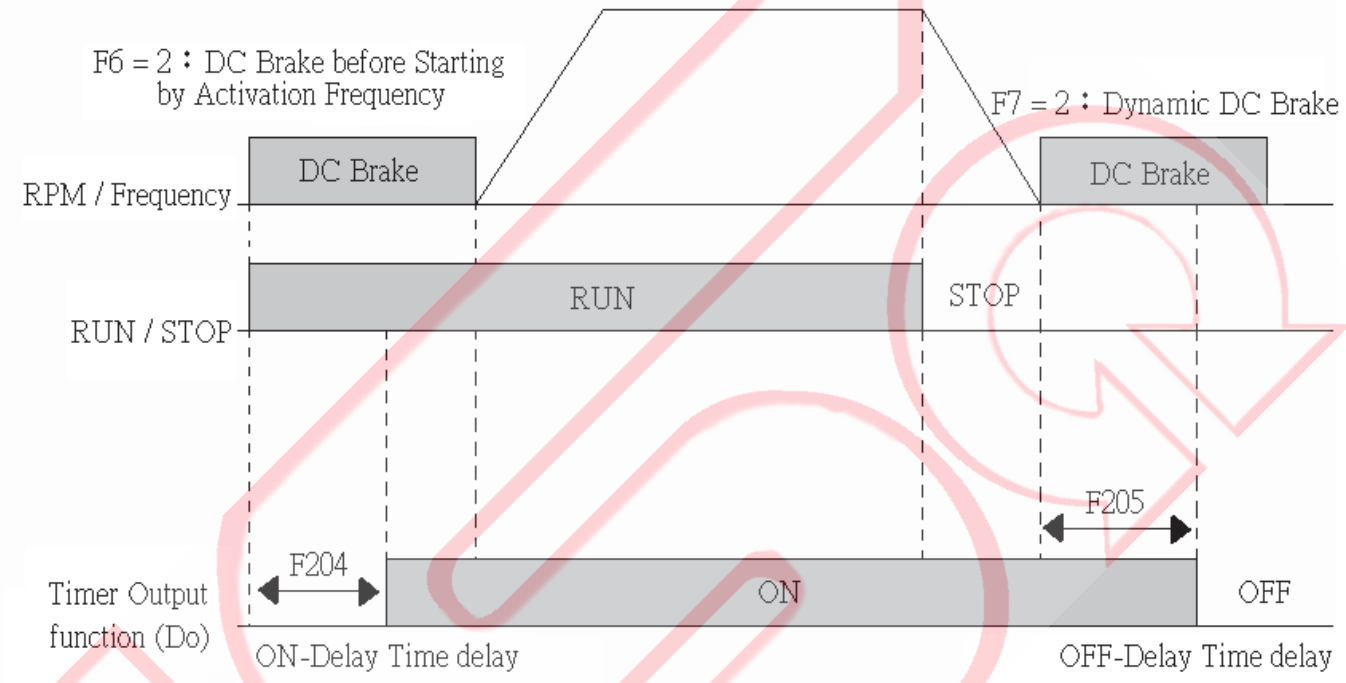

NO.2.20 version

200V series specifications

Model No.LS800-2□□□		0K2	0K4	0K7	1K5	2K2	4K0	5K5	7K5	011	015	018	022	030	037	045	055	075	090	110
Applicable motor power (KW)		0.2	0.4	0.75	1.5	2.2	4.0	5.5	7.5	11	15	18.5	22	30	37	45	55	75	90	110
Applicable motor power (HP)		0.25	0.5	1	2	3	5	7.5	10	15	20	25	30	40	50	60	75	100	125	150
Outpour	Rated output capacity (KVA)	0.6	1.2	1.7	2.7	3.8	6.4	9.5	12.5	17.5	23	29	34	45	57	68	82	114	133	162
	Continuous rated current (A)	1.6	3.2	4.5	7.0	10	17	25	33	46	62	76	90	120	150	180	215	300	350	425
	Max. output voltage (V)	3-phase corresponding input voltage																		
	Output frequency range (Hz)	0.00～400.00Hz																		
	Carrier frequency (Hz)	16KHZ						12KHZ			10KHZ			8KHZ			6KHZ		5KHZ	3KHZ
Power supply	Input voltage, frequency	3-phase power supply 200V～240V 50/60HZ																		
	Tolerance for voltage fluctuation of power supply	±10%(180V～264V)																		
	Tolerance for frequency fluctuation of power supply	±5%(47HZ～63HZ)																		
Cooling fan		Forced fan																		

400V series specifications

Model No.LS700-4□□□		0K7	1K5	2K2	4K0	5K5	7K5	011	015	018	022	030	037	045	055	075	090	110	132	160	185	220
Applicable motor power (KW)		0.75	1.5	2.2	4.0	5.5	7.5	11	15	18.5	22	30	37	45	55	75	90	110	132	160	185	220
Applicable motor power (HP)		1	2	3	5	7.5	10	15	20	25	30	40	50	60	75	100	125	150	175	200	250	300
Outpour	Rated output capacity (KVA)	2.4	3.4	5.3	6.8	9.5	13	19	24	30	34	47	57	70	87	110	144	164	210	228	265	340
	Continuous rated current (A)	3.2	4.5	7.0	9.0	12.5	17	25	32	40	46	62	75	92	115	150	180	216	275	300	350	450
	Max. output voltage (V)	3-phase corresponding input voltage																				
	Output frequency range (Hz)	0.00～400.00Hz																				
	Carrier frequency (Hz)	16KHZ				12KHZ			10KHZ			8KHZ			6KHZ		5KHZ		4KHZ		3KHZ	
Power supply	Input voltage, frequency	3-phase 380V～480V 50/60HZ																				
	Tolerance for voltage fluctuation of power supply	±10%(342V～528V)																				
	Tolerance for frequency fluctuation of power supply	±5%(47HZ～63HZ)																				
Cooling fa		Forced fan																				

Flux Vector Model LS800 Series

■ Model Instructions

LS800 – 22K2

- AC DRIVE Model Number
- Power : 2.2KW
- 2 : input 200V~240V
- 4 : input 380V~460V

■ STANDARD SPECIFICATIONS

200V Series

LS800 Model	20K7	21K5	22K2	24K0	25K5	27K5	2011	2015	2018	2022	2030	2037	2045	2055	2075	2090	2110
Max.Motor(kw) Rated	0.75	1.5	2.2	4.0	5.5	7.5	11	15	18.5	22	30	37	45	55	75	90	110
Output Capacity(KVA) of Drive	1.7	2.8	4.2	6.0	9.1	12.2	17.5	23	29	34..7	44	55	67	82	110	140	160
Rated Current(A) of Drive	4.5	7.5	11	16	24	33	46	61	76	90	115	145	175	215	300	350	450

400V Series

LS800 Model	40K7	41K5	42K2	44K0	45K5	47K5	4011	4015	4018	4022	4030	4037	4045	4055	4075	4090	4110	4132	4160	4185	4220
Max.Motor(kw) Rated	0.75	1.5	2.2	4.0	5.5	7.5	11	15	18.5	22	30	37	45	55	75	90	110	132	160	185	220
Output Capacity(KVA) of Drive	2.0	3.2	4.2	7.0	9.5	13	18	23.5	29	33	46	53	68	84	110	150	170	210	230	260	340
Rated Current(A) of Drive	3.2	4.5	7.0	9.0	12	17	23	30	38	43	58	70	85	110	150	190	216	275	300	350	450

	Item	220V Rating	400V Rating
Power source	Input Voltage, frequency	Three phase 220/208/220V 50/60Hz, 230V 60Hz	Three phase 380/400/415/440/460V 50/60Hz
	Allow Voltage Variance	+10%, -15%	
	Allow Frequency Variance	±5%	
	Max. Output Voltage	Three phase 220/208/220/230V corresponds to input voltage	Three phase 380/400/415/440/460V corresponds to input voltage
	Rated Output Frequency	Setting Max. Range 0.1Hz ~ 400Hz	
Control Characteristics	Control Model	Sine wave SVPWM two or three phase modulated switch frequency 2K ~ 16KHz adjustable, choose one of 5 control modes: V/f, V/f + closed loop, V/f sensorless, flux vector control + closed loop, and flux vector sensorless	
	Starting Torque	150% / speed zero (150% / 1Hz without PG card)	
	Range of Speed Control	1:1000 with PG card, 1:100 without PG card	
	Precision of Speed Control	±0.02% (±0.2% without PG card)	
	Torque Control	Four quadrant control, zero speed vector positioning control, variable and constant current torque control	
	Control Function	36 Indications, 8 command sources of rotation speed, speed searching, torque limits, zero speed vector control, variable and constant current torque control, sink and source option, multi-work input and output terminal control, 16 preset speeds control, option card, jump frequency, AVR, Auto-Tuning dynamic motor parameters, S curve, slip compensation, torque compensation, upper and lower frequency setting, DC brake in start/stop, double PID function, power saving operation, intelligent water pump function setting, RS485/ Modbus communication.	
	Frequency Precision (Temperature Variation)	Digital signal: ±0.1% (-10°C ~ +40°C)	Analog signal: ±0.1% (25°C ~ ±10°C)
	Frequency Setting Resolution	Digital signal: 0.1Hz (0.1 ~ 400Hz) Analog signal : 0.1Hz/60Hz * (11bit + symbol)	
	Frequency Output Resolution	0.1Hz	
	Overload Limited	Rated current 150%, 1 Min.	
	Analog Rated Setting Signal	DC 0 ~ ±10V, 0 ~ 10V, 0 ~ 20 mA (499Ω, with PG card for impulse input control)	
	Time for Speed Acc/Dec	0.1 sec ~ 1200 sec, 4 adjustments are individually distributed to 16 speeds	
	Torque for Braking	About 20%, up to 125% with braking controller	
Protection Function	Motor Protection	Integral electrical thermo protection	
	Instantaneous Over Current	When over 200% rated current and skip current protection, motor stops	
	Overload	About 150% rated output current, motor stops after 1 Min.	
	Over Voltage	DC voltage in main circuit about 400V, motor stops	DC voltage in main circuit about 800V, motor stops
	Low Voltage	DC voltage in main circuit below 180V, motor stops	DC voltage in main circuit below 380V, motor stops
	Power Protection	Input (equipped above 5.5KW), output phase lag protection (equipped above 0.4KW)	
	Instantaneous Power Break Compensation	Factory setting: Instantaneous power break, motor stops in 15 ms	
	Ventilation Over-heat	Protected, by thermo-switch, can be read and monitored	
	Stall Prevention	In speed Acc/Dec, stall prevention during operation	
	Ground Protection	Electrical circuit protection	
	Charging Indicating	DC voltage in main circuit over 50V, charging light is "on"	
Environment	Location	Indoor, no corrosive and free from dust	
	Ambient Temp.	-10 ~ +40°C (closed and wall mounted type), -10 ~+45°C (open type), no freezing	
	Storage Temp. (*2)	-20 ~ +60°C	
	Humidity	Below 90% RH (no condensing)	
	Vibration	1G below 20Hz, 0.2G during 20 ~ 50Hz	

(Note 1) Max. applicable capacity of motor is based on 4-pole motor. **(Note 2)** If storage temperature is too high, it might destroy the capacitor in main circuit.
(Note 3) Large capacity under development, please contact us.

NO.2.20 version

200V Series

KW	20K4	20K7	21K5	22K2	24K0	25K5	27K5	2011	2015
HP	0.5	1	2	3	5	7.5	10	15	20
F106	0.040	0.040	0.030	0.030	0.025	0.025	0.020	0.020	0.015
F108	5000	5000	5000	5000	5000	5000	5000	5000	5000
F109	220 V	220 V	220 V	220 V	220 V	220 V	220 V	220 V	220 V
F120	220 V	220 V	220 V	220 V	220 V	220 V	220 V	220 V	220 V
F121	2.0 A	3.5 A	6.0 A	8.2 A	15 A	20 A	27 A	38 A	50 A
F122	60 Hz	60 Hz	60 Hz	60 Hz	60 Hz	60 Hz	60 Hz	60 Hz	60 Hz
F123	1680	1710	1710	1720	1720	1740	1740	1755	1755
F124	0.5 HP	1.0 HP	2.0 HP	3.0 HP	5.0 HP	7.5 HP	10 HP	15 HP	20 HP
F125	4P	4P	4P	4P	4P	4P	4P	4P	4P

KW	2018	2022	2030	2037	2045	2055	2075	2090	2110
HP	25	30	40	50	60	75	100	125	150
F106	0.015	0.010	0.010	0.008	0.008	0.006	0.006	0.003	0.003
F108	5000	5000	5000	5000	5000	3000	3000	3000	2000
F109	220 V	220 V	220 V	220 V	220 V	220 V	220 V	220 V	220 V
F120	220 V	220 V	220 V	220 V	220 V	220 V	220 V	220 V	220 V
F121	62 A	75 A	97 A	128 A	150 A	187 A	235 A	300 A	355 A
F122	60 Hz	60 Hz	60 Hz	60 Hz	60 Hz	60 Hz	60 Hz	60 Hz	60 Hz
F123	1760	1760	1760	1775	1775	1780	1780	1780	1780
F124	25 HP	30 HP	40 HP	50 HP	60 HP	75 HP	100 HP	125 HP	150 HP
F125	4P	4P	4P	4P	4P	4P	4P	4P	4P

NO.2.20 version

400V Series

KW	40K7	41K5	42K2	44K0	45K5	47K5	4011	4015	4018	4022	4030
HP	1	2	3	5	7.5	10	15	20	25	30	40
F106	0.040	0.030	0.030	0.025	0.025	0.020	0.020	0.015	0.015	0.010	0.010
F108	5000	5000	5000	5000	5000	5000	5000	5000	5000	5000	5000
F109	380 V	380 V	380 V	380 V	380 V	380 V	380 V	380 V	380 V	380 V	380 V
F120	380 V	380 V	380 V	380 V	380 V	380 V	380 V	380 V	380 V	380 V	380 V
F121	1.9 A	3.7 A	5.3 A	8.2 A	12 A	15 A	22 A	28 A	36 A	44 A	58 A
F122	60 Hz	60 Hz	60 Hz	60 Hz	60 Hz	60 Hz	60 Hz	60 Hz	60 Hz	60 Hz	60 Hz
F123	1710	1710	1720	1720	1740	1740	1755	1755	1760	1760	1760
F124	1.0 HP	2.0 HP	3.0 HP	5.0 HP	7.5 HP	10 HP	15 HP	20 HP	25 HP	30 HP	40 HP
F125	4P	4P	4P	4P	4P	4P	4P	4P	4P	4P	4P

KW	4037	4045	4055	4075	4090	4110	4132	4160	4185	4220	Reserve
HP	50	60	75	100	125	150	175	200	250	300	
F106	0.008	0.008	0.006	0.006	0.003	0.003	0.003	0.003	0.003	0.003	Reserve
F108	5000	5000	4000	4000	3000	3000	3000	3000	2000	2000	
F109	380 V	380 V	380 V	380 V	380 V	380 V	380 V	380 V	380 V	380 V	
F120	380 V	380 V	380 V	380 V	380 V	380 V	380 V	380 V	380 V	380 V	
F121	72 A	84 A	108 A	135 A	165 A	210 A	260 A	290 A	340 A	385 A	
F122	60 Hz	60 Hz	60 Hz	60 Hz	60 Hz	60 Hz	60 Hz	60 Hz	60 Hz	60 Hz	
F123	1775	1775	1780	1780	1780	1780	1780	1780	1780	1780	
F124	50 HP	60 HP	75 HP	100 HP	125 HP	150 HP	175 HP	200 HP	250 HP	300 HP	
F125	4P	4P	4P	4P	4P	4P	4P	4P	4P	4P	